# ELECTRONIC INCLINOMETER

## INSTALLATION & TECHNICAL MANUAL

**Am Lunedeich 131**
**27572 Bremerhaven**

**Tel: +49 (0) 471 483 9990**
**Fax: +49 (0) 471 483 99910**
**Int. Code: +49**
**Email: sales@cassens-plath.de**
**Web: https://www.cassens-plath.de/**

# SESTREL INCLINOMETER INSTALLATION & CALIBRATION

## CONTENTS.


General: System Description & Specification.

Section 1: Standard Unit Dimensions and Installation.

Section 2: System Configurations and Connections.

Section 3: Installation Adjustments

Section 4: Operating Instructions.

Section 5: IEC 61162 Serial Data Interfaces & Failure Alert Messages.

Section 6: Technical Notes & Drawings.

Section 7: Demonstration Mode.


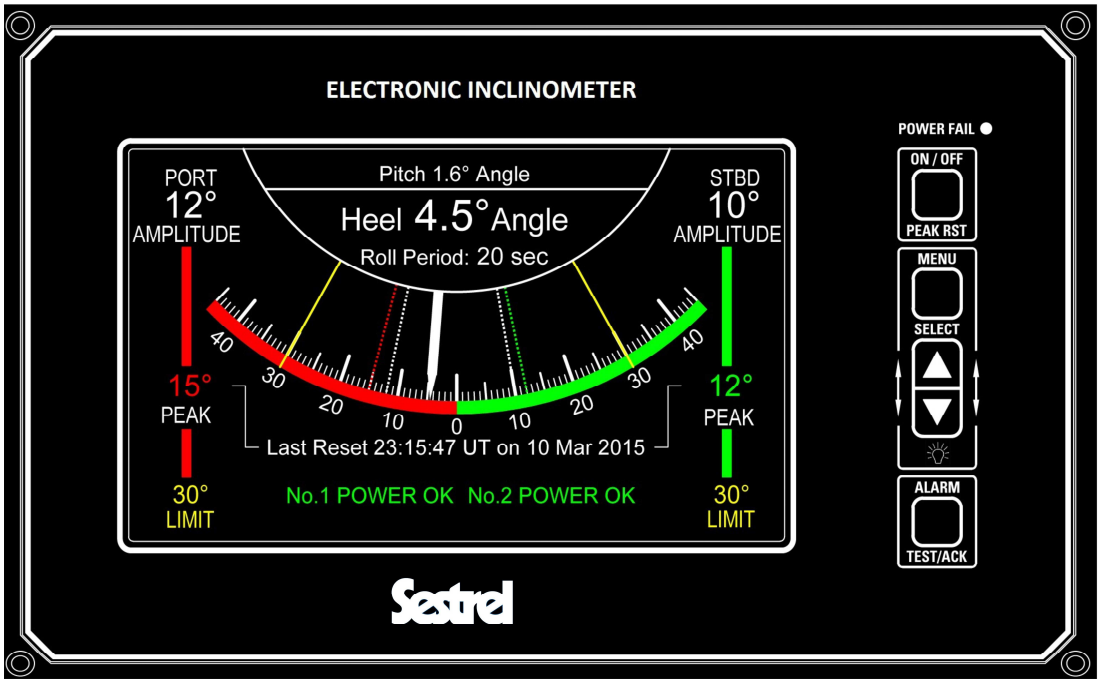

# SESTREL INCLINOMETER INSTALLATION & CALIBRATION

**General: -**

**Sestrel NT1000 EPR Electronic Inclinometer**

Commensurate with accurate assessment of Vessel dynamics for improved safety / accident prevention / subsequent investigation and with effect from 1st July 2015, IMO recommends Governments to ensure that an Electronic Inclinometer is installed which conforms to performance standards not inferior to those specified in MSC.363(92) adopted 14th June 2013.

This measure reflects the obvious limitations of the traditional mechanical “pendulum” (mass / inertia / inability to communicate with VDRs etc.) versus the electronic accelerometer solution which provides accurate real time and stored data – both displayed and transmitted complete with alarm functions – to continuously monitor and warn of developing instability based on increasingly adverse heel angles and roll periods.

Accordingly, the Sestrel NT1000 EPR Electronic Inclinometer is Type Approved and Certificated by DNV GL as fully compliant with all aspects of MSC.363 (92), IEC 60945, ISO/PAS 19697:2014(E) in addition to the general requirements contained in resolution A.694 (17).

Suitable for bracket and panel mounting the NT1000 EPR Inclinometer display unit is simply and easily installed with single or multi head display capabilities and results in full colour real time display of Heel, Roll Period (and Pitch Data) – all of which (with the exception of Pitch Data) is available for serial data transmission to external “listeners” such as VDR and with bidirectional communication with BAM systems etc.

Operator adjustable Alarm levels, and inspection / display of historical dynamic performance (last 3 mins / last 30 mins) are easily read from the “analogue” colour presentation which features adjustable illumination to suit all operating conditions.

The Inclinometer Sensor Unit is supplied as a sealed unit with 3m of fitted cable for termination to a 2 Entry Junction Box (supplied) and further factory supplied cables (BAM / VDR / Slave Units) are provided for all plug / socket connection to the Inclinometer Control Unit.

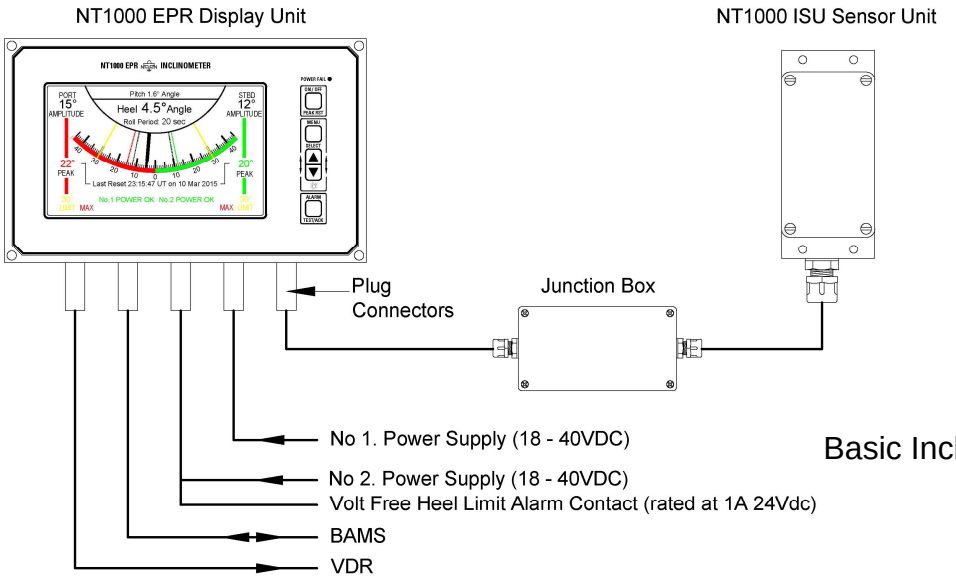


Basic Inclinometer System

# SESTREL INCLINOMETER INSTALLATION & CALIBRATION

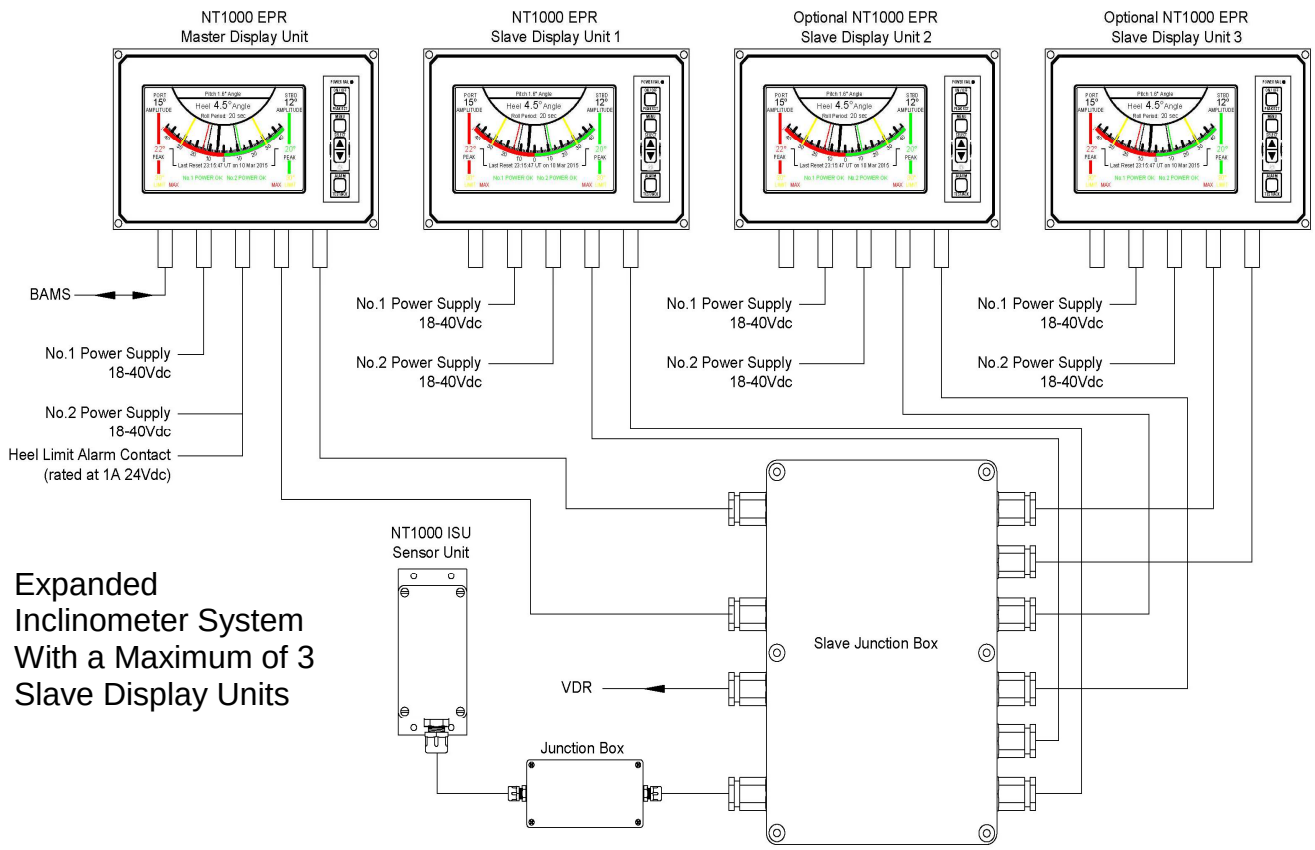


Expanded Inclinometer System With a Maximum of 3 Slave Display Units

## NT1000 EPR INCLINOMETER SYSTEM SPECIFICATION

| POWER SUPPLY | |
|---|---|
| Main Power | 18-40Vdc |
| Backup Power | 18-40Vdc |
| Power Consumption | 12W max |

| MEASUREMENT ACCURACY | |
|---|---|
| Pitch / Roll Accuracy | ±1° or 5% whichever is greater |
| Roll Period | 4 - 40seconds |
| Roll Period Accuracy | 1 second or 5% whichever is greater. |

| BAMS SERIAL DATA INTERFACE | |
|---|---|
| IEC61162/1 OR IEC61162/2 | 4800 Baud |
| | 38400 Baud |
| Output Sentences | $IIALF<br>$IIALC<br>$IIHBT |
| Input Sentence | $IIACN |

| VDR SERIAL DATA INTERFACE | |
|---|---|
| IEC61162/1 OR IEC61162/2 | 4800 Baud |
| | 38400 Baud |
| Output Sentences | $IIHRM<br>$IIHBT |

| MECHANICAL DATA | CONTROL UNIT | SENSOR UNIT |
|---|---|---|
| Width | 252mm | 110mm |
| Height | 156mm | 65mm |
| Depth | 50mm | 55mm |
| Weight | 2.2kg | 0.35kg |

## Section 1: Standard Unit Dimensions and Installation.

### 1.1 The NT1000 EPR Control Unit.

### 1.2 The NT1000 ISU Inclinometer Sensor Unit.

### 1.3 The ISU Junction Box.

### 1.4 Optional Slave Display Unit Junction Box.

**Installation Note – Radio Frequency Interference (RFI).**

The NT1000 EPR Inclinometer system exhibits high levels of RFI rejection and minimal levels of radiated interference by virtue of careful decoupling, suppression and screening measures exercised as a standard Sestrel Systems design function and is fully compliant with the statutory requirements of EN60945 (IEC60945).

However, any potential risk of cross coupling should be minimised where possible by ensuring that Inclinometer components and associated cable routing is afforded the greatest separation possible from high power transmitters, couplers and other RF carrying cables.

### 1.1 The NT1000 EPR Control Unit.

Compass Safe Distance – 0.2m

The Control Unit is the principal element from the viewpoint of the operator and contains the electronics associated with main & backup 18-40Vdc supply filtering, voltage regulation & display drive circuitry. Operator control is via a tactile membrane with 5 keypads.

The Control Unit is not suitable for external location and should be installed in an enclosed bridge or wheelhouse at, or close to, the main steering position and commensurate with clear field of operator vision.

The unit may be panel or foot mounted as required with allowance made for cable access to the sockets at the rear of the unit.

The unit is supplied with 5 cables 3m long which can be extended if required with suitable twisted pair cable.

Outline dimensions and mounting details are shown in Fig 1.1.

## 1.1 The NT1000 EPR Control Unit (continued).

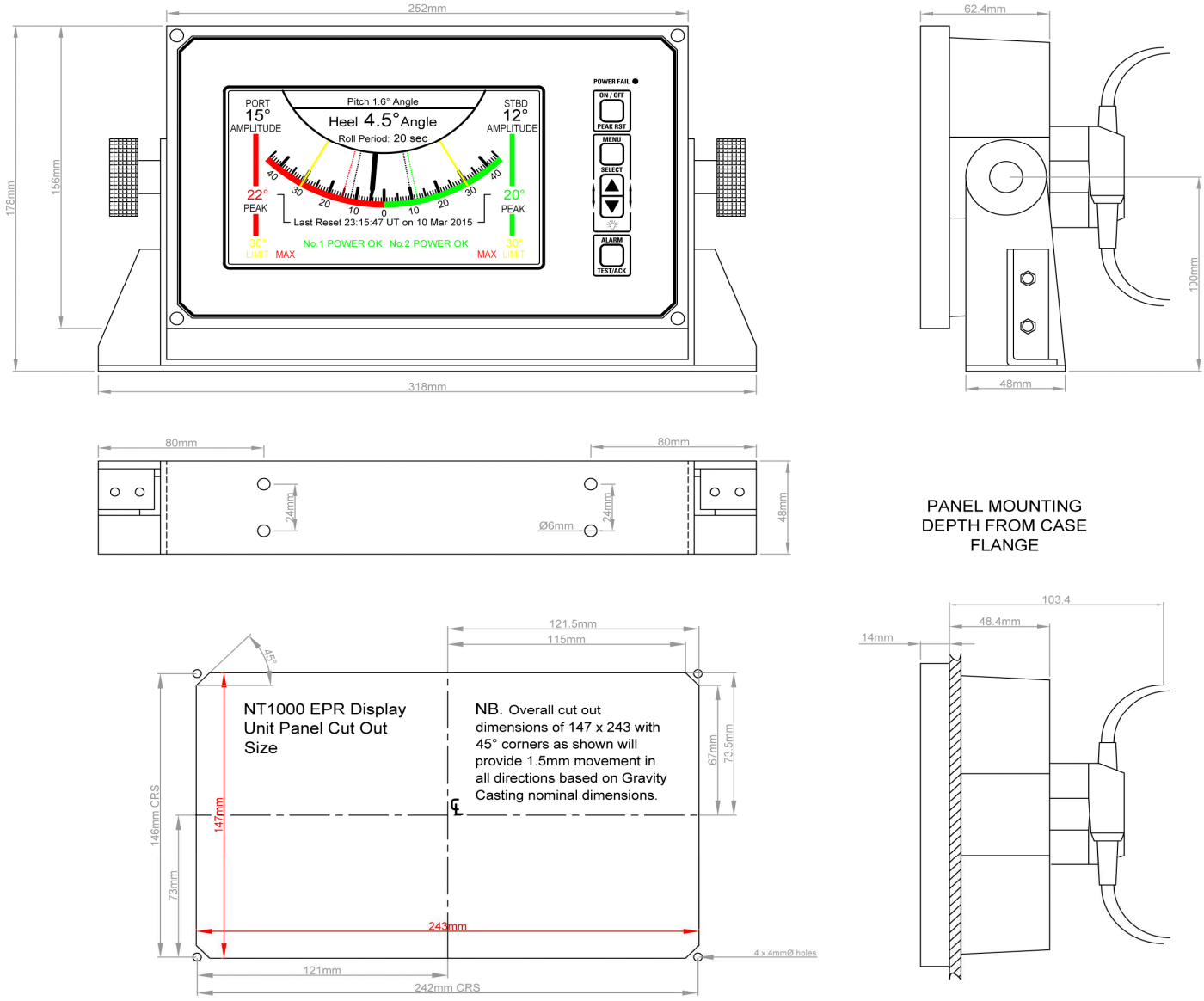


Fig 1.1 NT1000 EPR Control Unit Dimensions & Mounting Details.

## 1.2 The NT1000 ISU Inclinometer Sensor Unit.

Compass Safe Distance – 0.2m

The NT1000 ISU Inclinometer Sensor Unit uses advanced solid state sensor devices to measure the pitch and roll angle of the vessel.

The NT1000 ISU unit is factory fitted with a 3m 4 core twisted pair cable for connection to the supplied junction box.

The unit is not suitable for external location and should ideally be located near the centre of the vessel on the roll axis. The mounting site should be carefully considered as the unit is sensitive to vibration. The orientation must be as detailed in Fig 1.2 with the BOW, PORT & STBD arrows facing the correct direction.

## 1.2 The NT1000 ISU Inclinometer Sensor Unit (continued).

Carefully follow Method 1 or Method 2 detailed in Section 1.2.1 to ensure the unit is installed vertically aligned with the vessel.

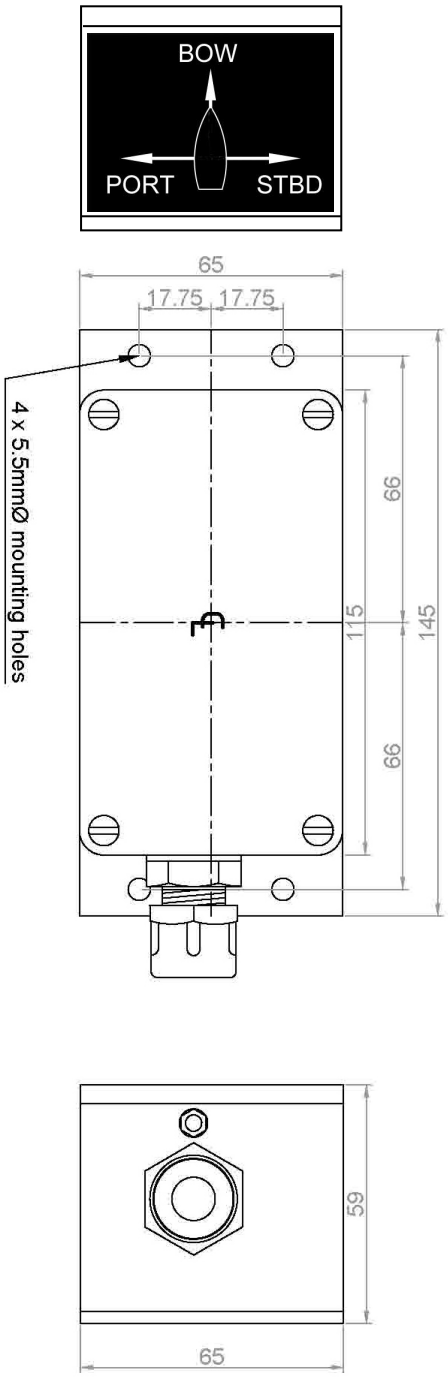


Fig 1.2 NT1000 ISU Inclinometer Sensor Unit Dimensions & Mounting Details.

NOTE: The sensor vertical calibration can be “fine tuned” by ±5° during installation Set Up menu adjustments, see Section 3.13.

### 1.2.1 NT1000 ISU Sensor Unit Vertical Alignment.

**NOTE:** The NT1000 ISU Inclinometer Sensor Unit is a precision sensing instrument that is factory calibrated in all 3 axis (x, y & z) prior to shipment. This calibration is not user adjustable. DO NOT remove the ISU PCB mounting screws as this will adversely affect the unit accuracy and will necessitate factory re-calibration.

**Method 1. Using a Mechanical Inclinometer as a Reference.**

If the vessel is equipped with an approved and accurate mechanical inclinometer this can easily be used to ensure the NT1000 ISU sensor unit is accurately vertically aligned with the vessel.


**i)** Note the vessel heel angle indicated on the mechanical inclinometer.
**ii)** Switch on the NT1000 EPR display unit and note the heel angle indicated.
**iii)** Adjust the ISU sensor position until the indicated heel angle agrees with mechanical inclinometer; securely fix the sensor unit to the vessel.

Note: Small corrections (±5°) can subsequently be applied via the Set Up menu, Section 3.13 refers.

**Method 2. Align the sensor with a perpendicular (vertical) surface.**

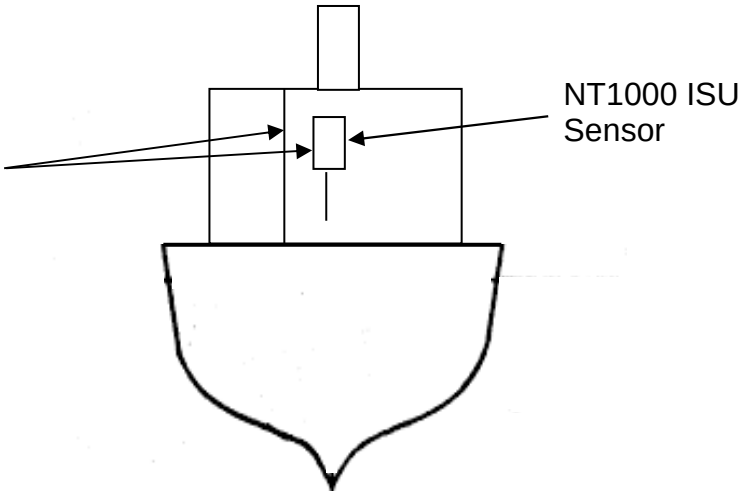


Note: Small corrections (±5°) can subsequently be applied via the Set Up menu, Section 3.13 refers.

## 1.3 The ISU Junction Box.

This unit has no electronic component content, housing only a terminal block to facilitate electrical connection between the Control Unit and the Inclinometer Sensor Unit.

The junction box should be located and secured in the vicinity of the ISU and within the scope of the 3m cable length fitted to the ISU. Whilst the box is splash proof it should be mounted in an accessible but sheltered position.

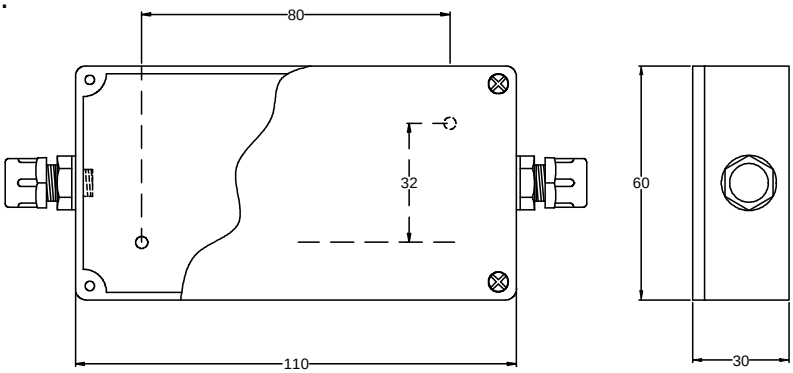


All dimensions in mm

**FIG 1.3 ISU Junction Box Outline Dimensions.**

## 1.4 Optional Slave Display Unit Junction Box.

This unit provides a convenient connection point to enable slave display units to be included in the system.

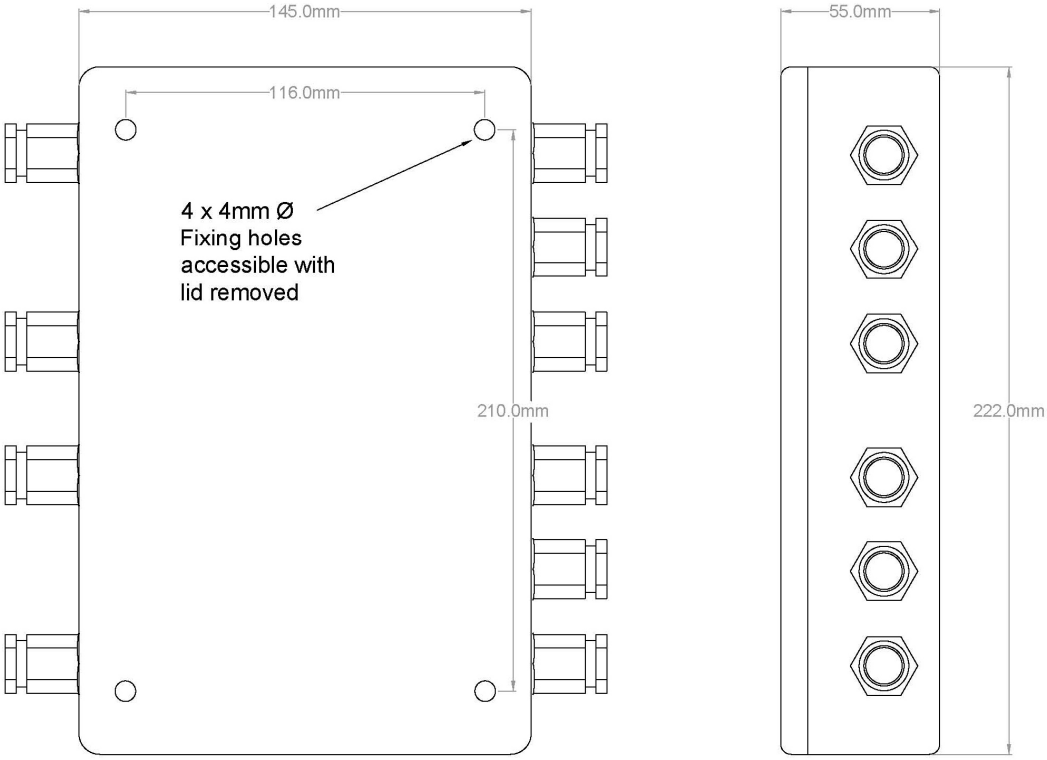


**FIG 1.4 Slave Display Unit Junction Box Outline Dimensions.**

## Section 2. System Configurations and Connections.

The basic NT1000 EPR Inclinometer system consists of a Control Unit (CU) and a pitch and roll sensor unit type NT1000 ISU. The system may be expanded to include additional “slave” display units which are identical to the “master” control unit.

The rear of the Control Unit is fitted with 5 round connectors. See Fig 2.0 for connector functions.

### 2.1 Basic System Configuration and Connections.

### 2.2 System Employing a Master CU and up to 3 Slave CU.

### 2.3 Heel Limit Alarm Relay Connections.

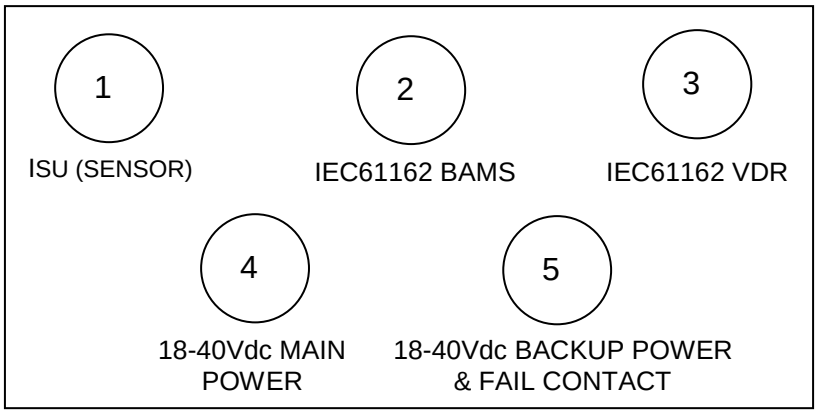


**Fig 2.0 Control Unit Back Plate Connector Functions.**

## 2.1 Basic System Configuration and Connections.

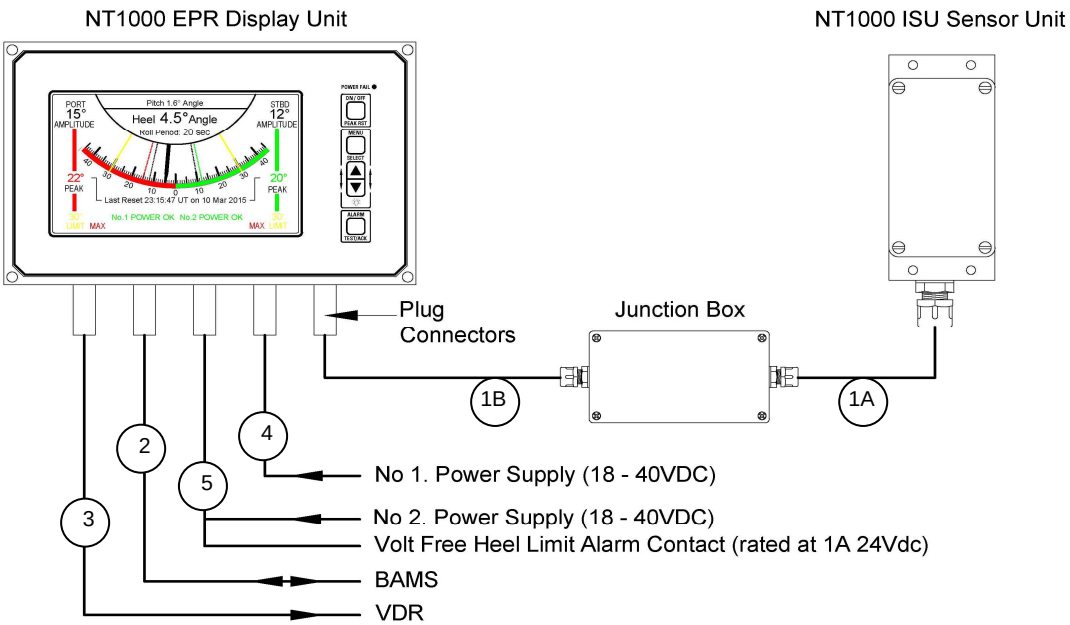

## 2.1 Basic System Configuration and Connections (continued).

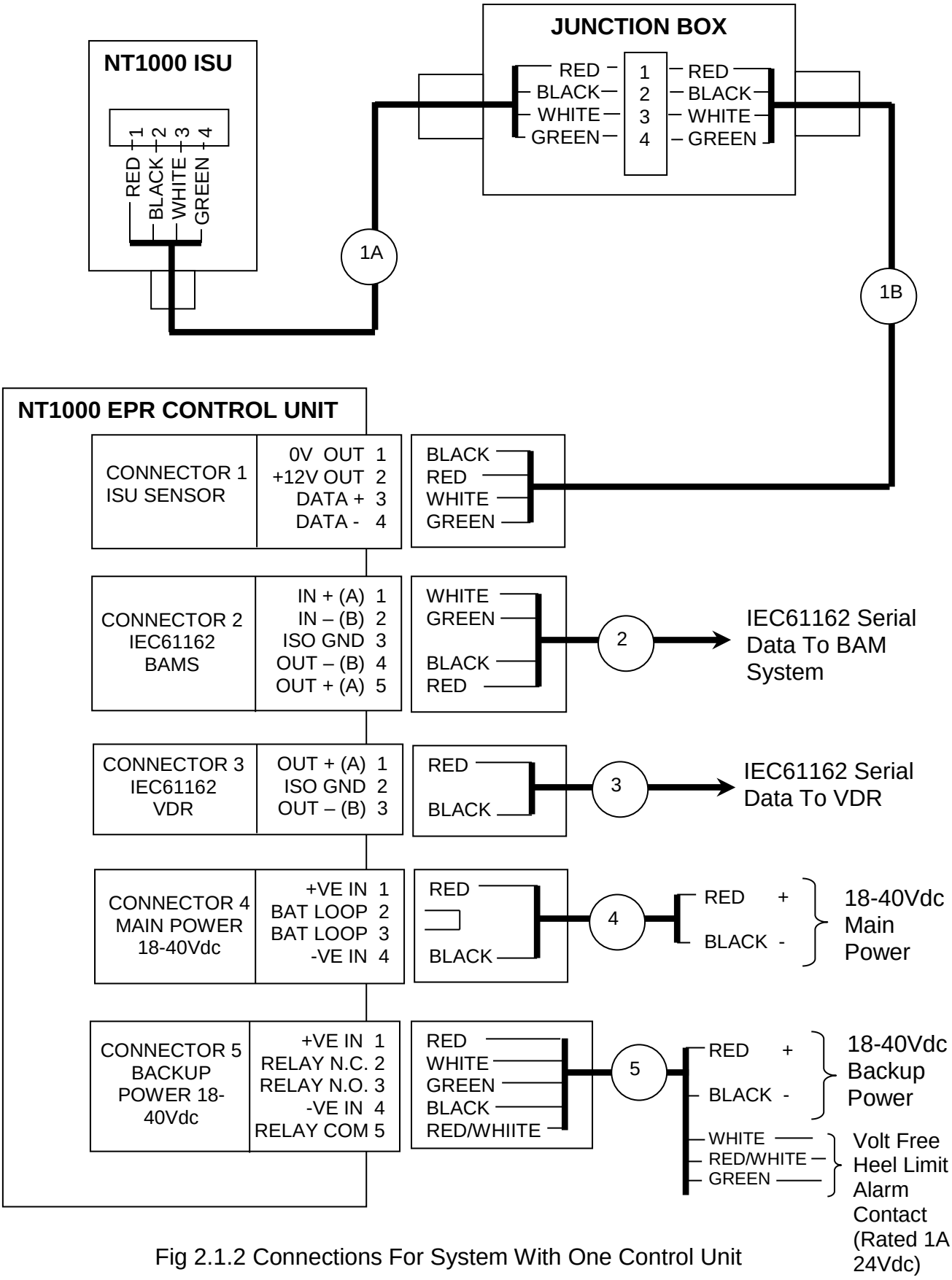


Fig 2.1.2 Connections For System With One Control Unit

## 2.2 System Employing a Master CU and up to 3 Slave CU.

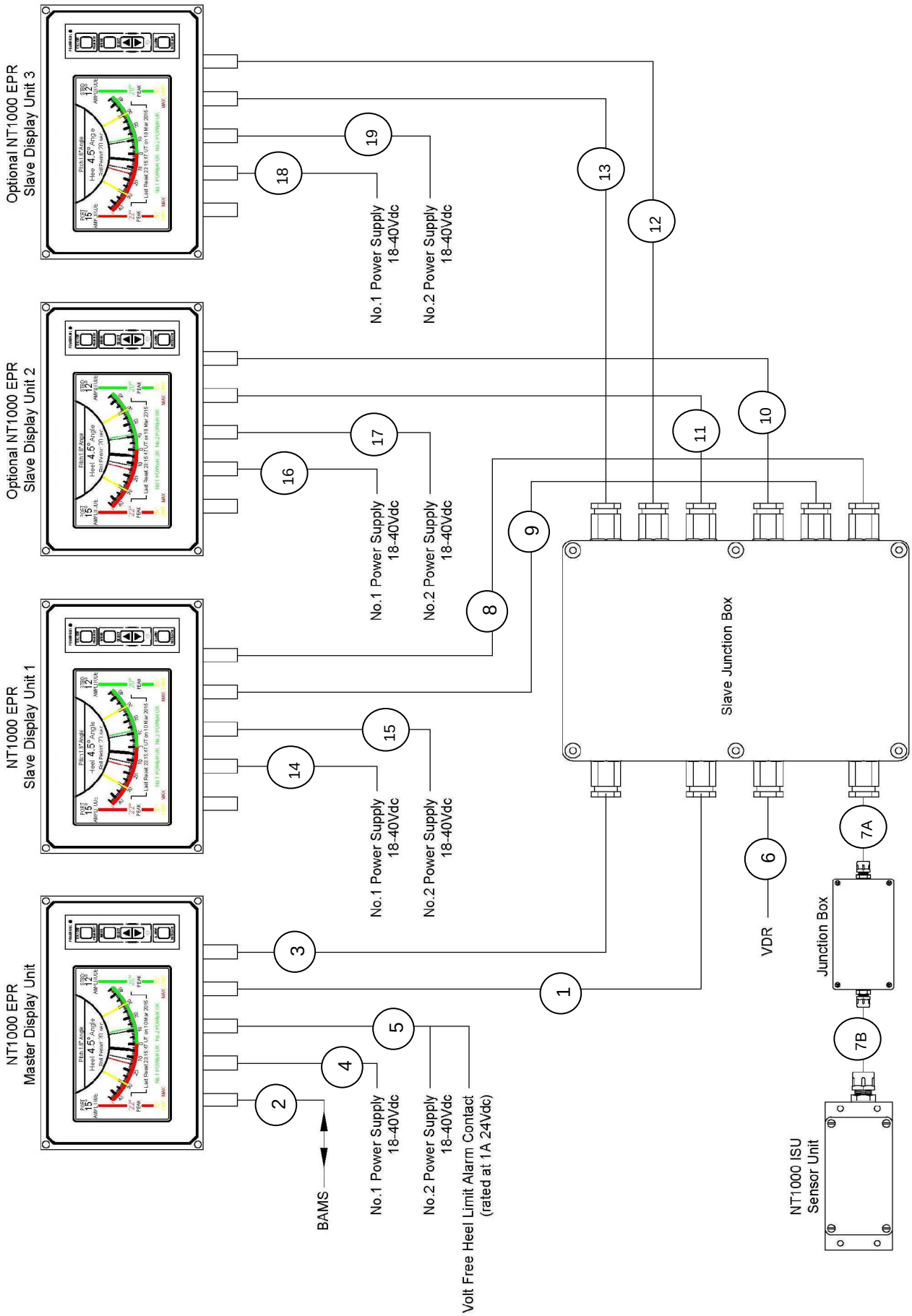


Fig 2.2.1 Expanded System Configuration With a Maximum of 3 Slave Display Units.

## 2.2 System Employing a Master CU and up to 3 Slave CU (continued).

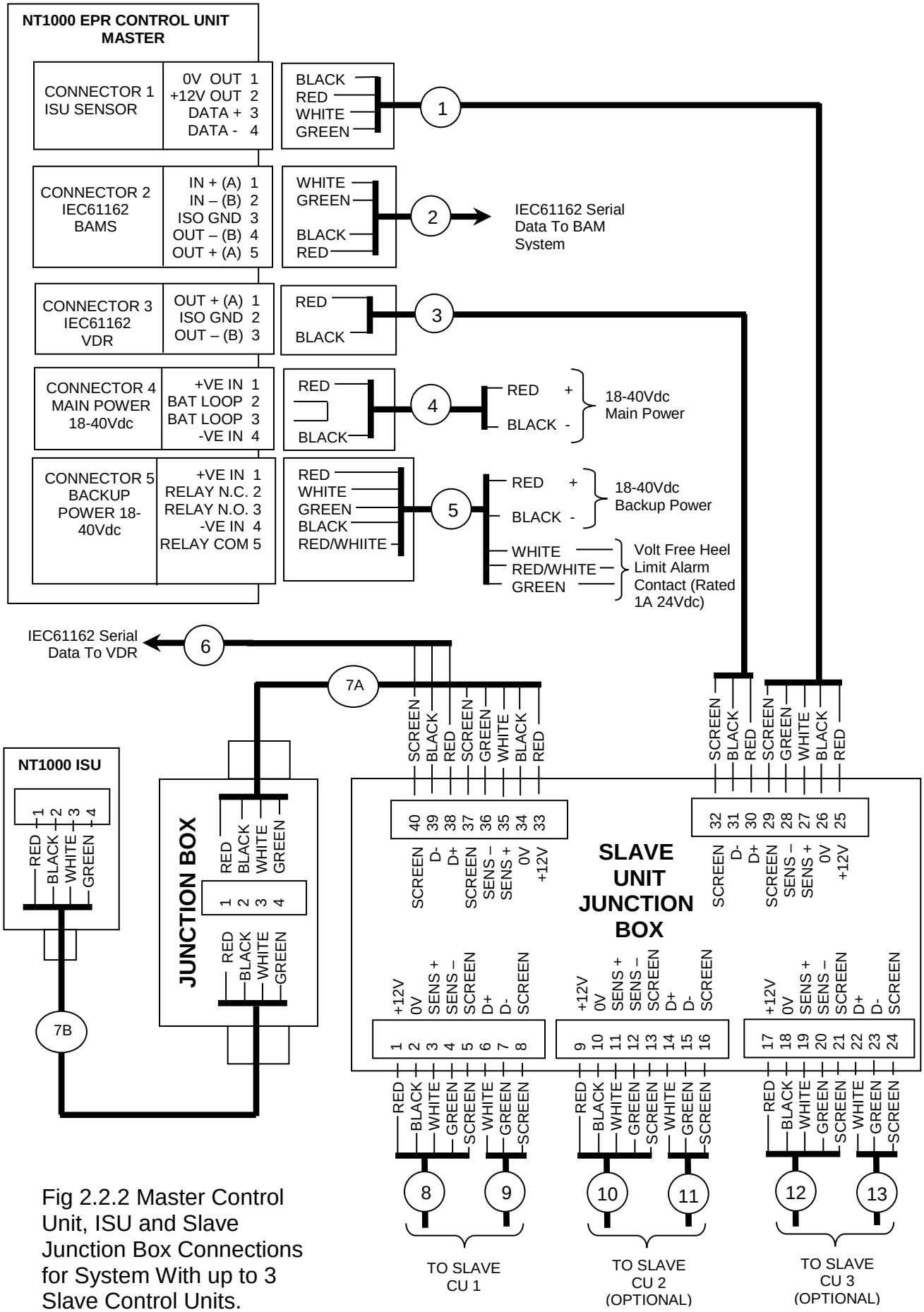


Fig 2.2.2 Master Control Unit, ISU and Slave Junction Box Connections for System With up to 3 Slave Control Units.

## 2.2 System Employing a Master CU and up to 3 Slave CU (continued).

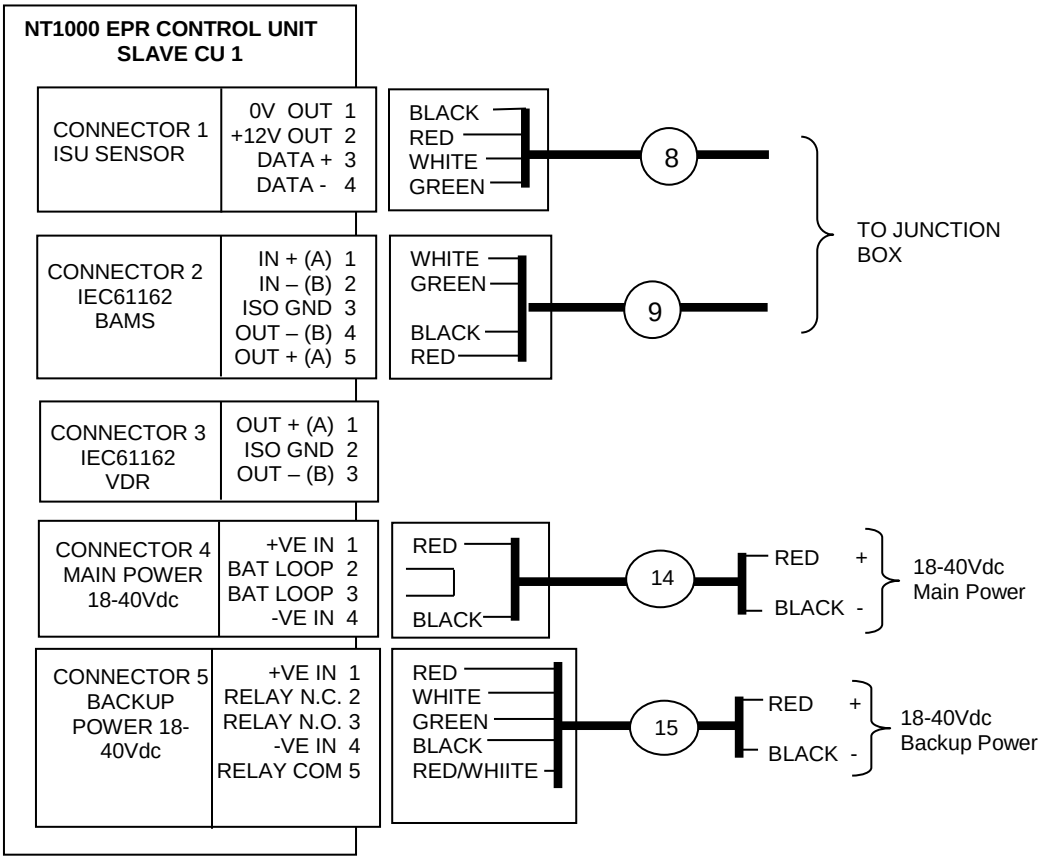


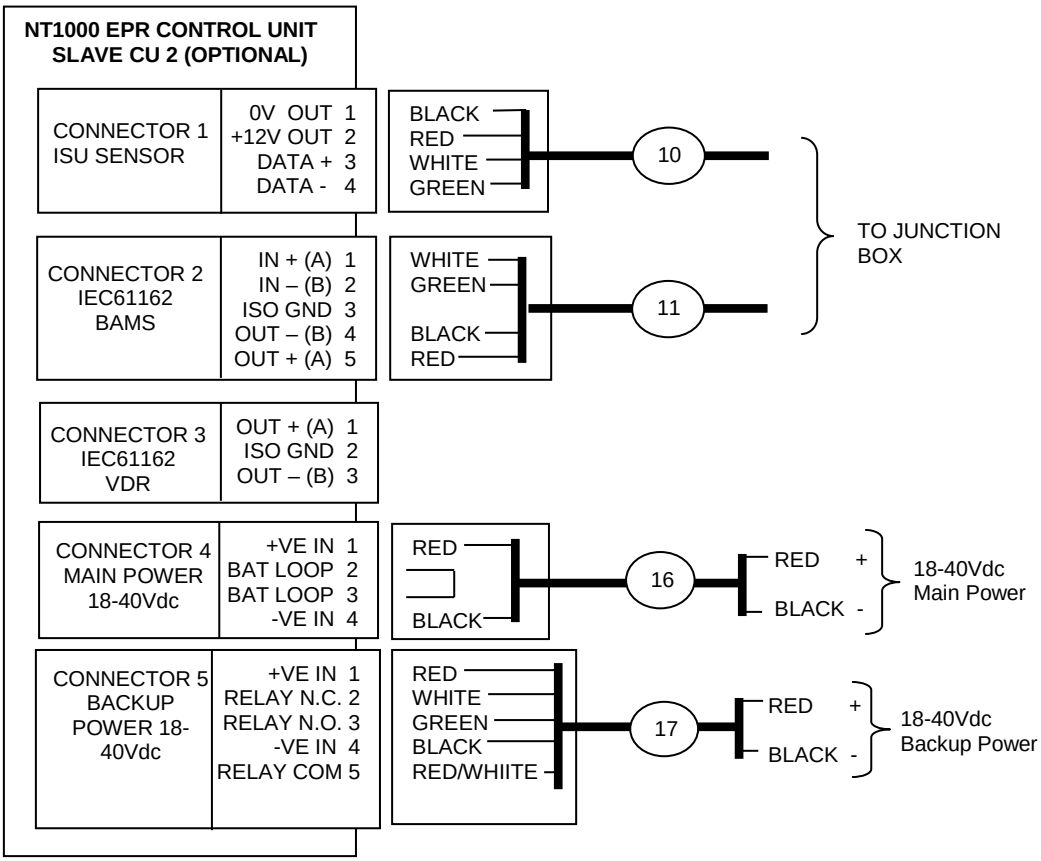


Fig 2.2.3 Slave Display Units 1 & 2 Connections.

## 2.2 System Employing a Master CU and up to 3 Slave CU (continued).

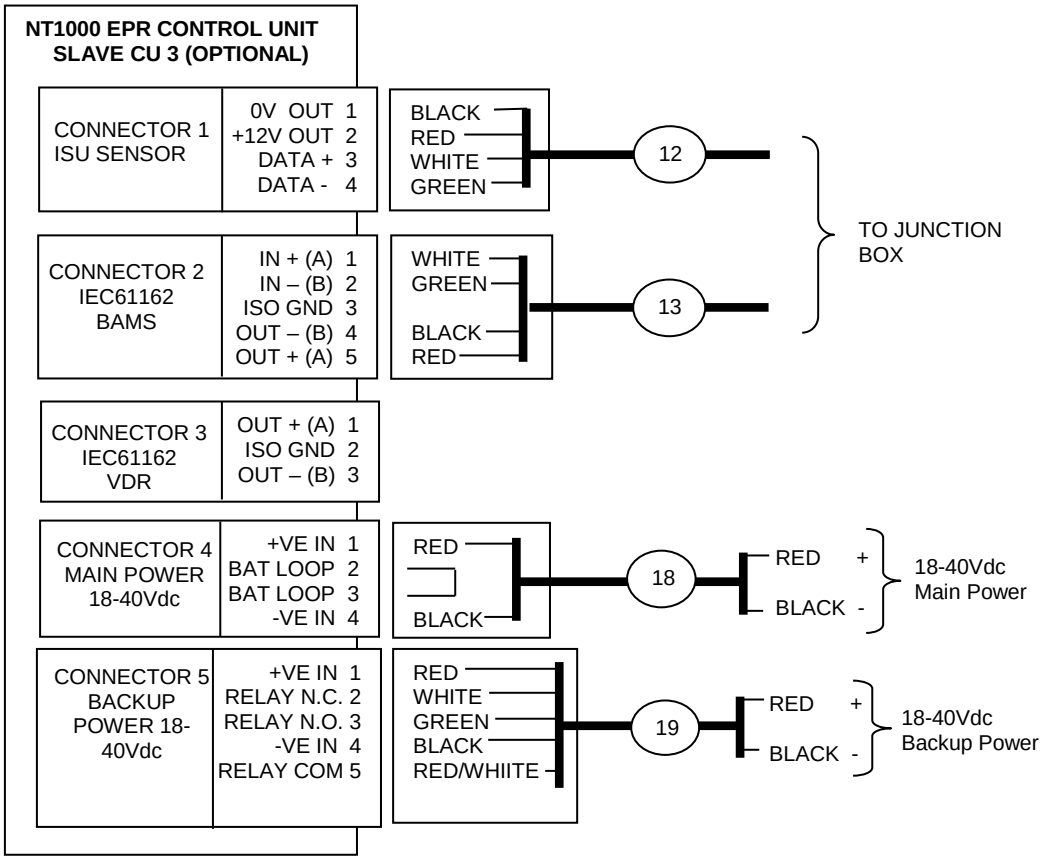


Fig 2.2.4 Slave Display Unit 3 Connections.

## 2.3 Heel Limit Alarm Volt Free Relay Connections.

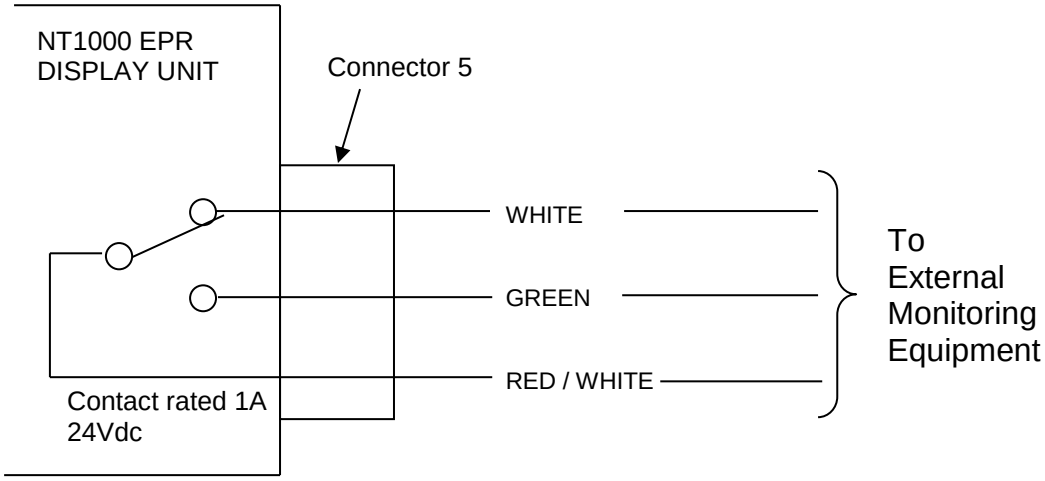


The Green and Red / White cores are short circuit when the NT1000 EPR system detects that the actual heel angle of the vessel has attained / exceeded the heel limit threshold value and the alarm has not been acknowledged. The White and Red / White cores are short circuit when the heel angle of the vessel is within the heel limit threshold value or when the heel threshold alarm has been acknowledged.

## Section 3: Installation Adjustments & Menu Parameters.

NOTE: The full range of installation Set Up parameters can only be adjusted from the “MASTER” control unit. If slave display units are employed all Set Up parameter values will follow the master unit with the exception of the “MASTER / SLAVE” parameter.

### 3.1 Menu Modes.

The menu can be accessed in two different modes, Inspection mode and Set Up mode.

The Inspection Mode is used by the crew to view recorded data and set up parameter values, changes to set up values are not permitted. See Section 3.2.

The Set Up mode is used at installation to adjust the set up parameter values. See Sections 3.3 to 3.16.

### 3.2 Inspection Mode Menu Entry / Exit.

Pressing the MENU key from the normal screen will show the full menu screen but the set up parameter values will be “greyed out” to indicate that they cannot be adjusted. See Fig 3.2.1.

The RECORDED DATA parameter line is not “greyed out” (indicating that the parameter is available) and the ON/OFF field will be highlighted. To view recorded data press the MENU key. To exit recorded data and return to the normal screen press the MENU or ALARM TEST / ACK key. The recorded data screen shows the last 3 minutes of heel angle data and the last 30 minutes of roll period data. See Fig 3.2.2

| MENU PARAMETERS | | | |
|---|---|---|---|
| 1 | RECORDED DATA | ON/OFF | MENU |
| 2 | MASTER / SLAVE | Master / Slave | Master |
| 3 | HEEL LIMIT ALARM | ±5° - ±45° | ±25° |
| 4 | TIME (UT) | 0 - 24hr | 23:15:18 |
| 5 | TIMER SINCE RESET | ON / OFF | ON |
| 6 | CURRENT DATE | DD/MM/YY | 20/06/15 |
| 7 | SENSOR VERTICAL CAL | ±5° | 0.0° |
| 8 | VDR BAUD RATE | 4K8 / 38K4 | 4K8 |
| 9 | VDR UPDATE RATE | 5/10 Hz | 10Hz |
| 10 | BAM BAUD RATE | 4K8 / 38K4 | 38K4 |

| | | | |
|---|---|---|---|
| | Disp V1.00 | Sensor V1.00 | Main V1.00 |

Fig 3.2.1. The Inspection Mode Menu.

NOTE: The system software version numbers are shown at the bottom of the MENU display.

### 3.2 Inspection Mode Menu Entry / Exit (continued).

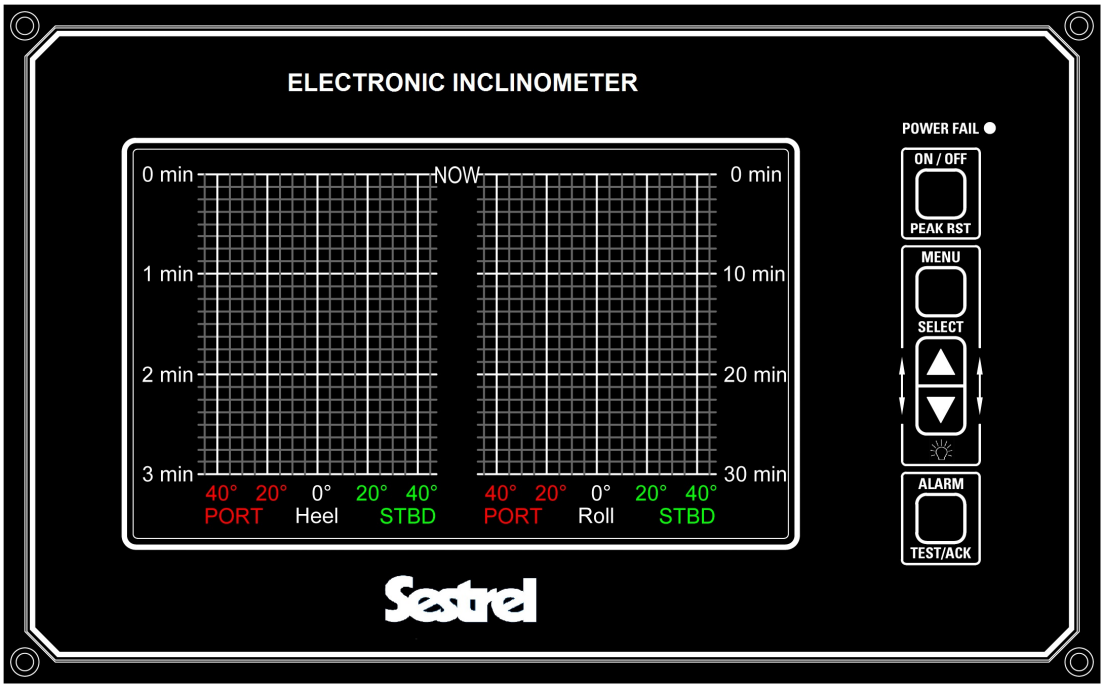


Fig 3.2.2. The Recorded Data Screen.

### 3.3 Set Up Menu Entry.

The installation Set Up menu is accessed by simultaneously pressing the MENU / SELECT and the DOWN keys for 5 seconds. The MENU PARAMETERS will be shown as detailed in Fig 3.3.1. Initially the RECORDED DATA ON/OFF field will be highlighted. Pressing the MENU key again will show the recorded data screen as detailed in Section 3.2.

| MENU PARAMETERS | | | |
|---|---|---|---|
| 1 | RECORDED DATA | ON/OFF | MENU |
| 2 | MASTER / SLAVE | Master / Slave | Master |
| 3 | HEEL LIMIT ALARM | ±5° - ±45° | ±25° |
| 4 | TIME (UT) | 0 - 24hr | 23:15:18 |
| 5 | TIMER SINCE RESET | ON / OFF | ON |
| 6 | CURRENT DATE | DD/MM/YY | 20/06/15 |
| 7 | SENSOR VERTICAL CAL | ±5° | 0.0° |
| 8 | VDR BAUD RATE | 4K8 / 38K4 | 4K8 |
| 9 | VDR UPDATE RATE | 5/10 Hz | 10Hz |
| 10 | BAM BAUD RATE | 4K8 / 38K4 | 38K4 |

Fig 3.3.1. The Set Up Menu.

### 3.4 Selecting Set Up Parameters.

The selected parameter is indicated by the highlight bar. To move the select bar down press the DOWN key. To move the select bar up press the UP key. An example screen is shown in Fig 3.4.1 with the HEEL LIMIT parameter selected.

| MENU PARAMETERS | | | |
|---|---|---|---|
| 1 | RECORDED DATA | ON/OFF | MENU |
| 2 | MASTER / SLAVE | Master / Slave | Master |
| 3 | HEEL LIMIT ALARM | ±5° - ±45° | ±25° |
| 4 | TIME (UT) | 0 - 24hr | 23:15:18 |
| 5 | TIMER SINCE RESET | ON / OFF | ON |
| 6 | CURRENT DATE | DD/MM/YY | 20/06/15 |
| 7 | SENSOR VERTICAL CAL | ±5° | 0.0° |
| 8 | VDR BAUD RATE | 4K8 / 38K4 | 4K8 |
| 9 | VDR UPDATE RATE | 5/10 Hz | 10Hz |
| 10 | BAM BAUD RATE | 4K8 / 38K4 | 38K4 |

Fig 3.4.1. Heel Limit Alarm Parameter Selected.

### 3.5 Adjusting Set Up Parameter Values.

Move the highlight bar until the desired parameter is selected, press the MENU / SELECT key to confirm that the value is to be changed. The highlight bar will move to the parameter value. See Fig 3.5.1.

| MENU PARAMETERS | | | |
|---|---|---|---|
| 1 | RECORDED DATA | ON/OFF | MENU |
| 2 | MASTER / SLAVE | Master / Slave | Master |
| 3 | HEEL LIMIT ALARM | ±5° - ±45° | ±25° |
| 4 | TIME (UT) | 0 - 24hr | 23:15:18 |
| 5 | TIMER SINCE RESET | ON / OFF | ON |
| 6 | CURRENT DATE | DD/MM/YY | 20/06/15 |
| 7 | SENSOR VERTICAL CAL | ±5° | 0.0° |
| 8 | VDR BAUD RATE | 4K8 / 38K4 | 4K8 |
| 9 | VDR UPDATE RATE | 5/10 Hz | 10Hz |
| 10 | BAM BAUD RATE | 4K8 / 38K4 | 38K4 |

Fig 3.5.1. Heel Limit Alarm Value Selected.

Once the parameter value has been highlighted it may be adjusted within the limits shown using the UP & DOWN keys.

### 3.6 Saving Set Up Parameter Values.

When the parameter has been adjusted to the desired value confirm / save the new value by pressing the MENU / SELECT key. The value will be stored and the highlight bar will return to the parameter selection column.

### 3.7 Set Up Menu Exit.

Providing no parameter values are being adjusted, an immediate exit from the Set Up menu is accomplished by pressing the ALARM TEST/ACK key.

If a parameter value is being adjusted pressing the ALARM TEST / ACK key will deselected the parameter and its value will revert to the last saved value.

If no parameter value is being adjusted and no keys are pressed for a period of 30 seconds the Set Up menu will automatically exit.

If a parameter value has been adjusted but not save / confirmed (by pressing the MENU / SELECT key) for a period of 30 seconds the parameter is automatically deselected and its value will revert to the last saved value.

### 3.8 The Master / Slave Parameter.

i) Enter the Set Up mode by simultaneously pressing the MENU and DOWN keys for 5 seconds. The Set Up menu will be shown with the RECORDED DATA parameter ON/OFF field highlighted.

| MENU PARAMETERS | | | |
|---|---|---|---|
| 1 | RECORDED DATA | ON/OFF | MENU |
| 2 | MASTER / SLAVE | Master / Slave | Master |
| 3 | HEEL LIMIT ALARM | ±5° - ±45° | ±25° |
| 4 | TIME (UT) | 0 - 24hr | 23:15:18 |
| 5 | TIMER SINCE RESET | ON / OFF | ON |
| 6 | CURRENT DATE | DD/MM/YY | 20/06/15 |
| 7 | SENSOR VERTICAL CAL | ±5° | 0.0° |
| 8 | VDR BAUD RATE | 4K8 / 38K4 | 4K8 |
| 9 | VDR UPDATE RATE | 5/10 Hz | 10Hz |
| 10 | BAM BAUD RATE | 4K8 / 38K4 | 38K4 |

ii) Press the DOWN key to step to the MASTER / SLAVE parameter.

| MENU PARAMETERS | | | |
|---|---|---|---|
| 1 | RECORDED DATA | ON/OFF | MENU |
| 2 | MASTER / SLAVE | Master/ Slave | Master |
| 3 | HEEL LIMIT ALARM | ±5° - ±45° | ±25° |
| 4 | TIME (UT) | 0 - 24hr | 23:15:18 |
| 5 | TIMER SINCE RESET | ON / OFF | ON |
| 6 | CURRENT DATE | DD/MM/YY | 20/06/15 |
| 7 | SENSOR VERTICAL CAL | ±5° | 0.0° |
| 8 | VDR BAUD RATE | 4K8 / 38K4 | 4K8 |
| 9 | VDR UPDATE RATE | 5/10 Hz | 10Hz |
| 10 | BAM BAUD RATE | 4K8 / 38K4 | 38K4 |

iii) Refer to Section 2 and confirm which type of system is installed and if multiple control units are fitted determine if this control unit is the “Master” or a “Slave” unit.

**3.8 The Master / Slave Parameter (continued).**

iv) Press the MENU / SELECT key to highlight the MASTER / SLAVE parameter value.

| | | | |
|---|---|---|---|
| 2 | MASTER / SLAVE | Master / Slave | Master |

v) Use the UP / DOWN keys as required to set the parameter value as follows:-

**Master** - Master Control Unit or only Control Unit.

**Slave** - Slave Control Unit

v) Press the MENU key to confirm the new value.

**3.9 The Heel Limit Alarm Parameter.**

**NOTE:** The following parameters can only be adjusted from the "MASTER" Control Unit. On slave display units the parameter values will correspond to the values set in the "MASTER" unit.

i) If required, enter the Set Up mode by simultaneously pressing the MENU and DOWN keys for 5 seconds.

ii) Press the DOWN key to step to the HEEL LIMIT ALARM parameter.

| MENU PARAMETERS | | | |
|---|---|---|---|
| 1 | RECORDED DATA | ON/OFF | MENU |
| 2 | MASTER / SLAVE | Master / Slave | Master |
| 3 | HEEL LIMIT ALARM | ±5° - ±45° | ±25° |
| 4 | TIME (UT) | 0 - 24hr | 23:15:18 |
| 5 | TIMER SINCE RESET | ON / OFF | ON |
| 6 | CURRENT DATE | DD/MM/YY | 20/06/15 |
| 7 | SENSOR VERTICAL CAL | ±5° | 0.0° |
| 8 | VDR BAUD RATE | 4K8 / 38K4 | 4K8 |
| 9 | VDR UPDATE RATE | 5/10 Hz | 10Hz |
| 10 | BAM BAUD RATE | 4K8 / 38K4 | 38K4 |

iii) Press the MENU / SELECT key to highlight the HEEL LIMIT ALARM parameter value.

| | | | |
|---|---|---|---|
| 3 | HEEL LIMIT ALARM | ±5° - ±45° | ±25° |

iv) Use the UP / DOWN keys to set the required parameter value.

v) Press the MENU key to confirm the new value.

### 3.10 Setting The Time.

i) If required, enter the Set Up mode by simultaneously pressing the MENU and DOWN keys for 5 seconds.

ii) Press the DOWN key to step to the TIME parameter.

| MENU PARAMETERS | | | |
|---|---|---|---|
| 1 | RECORDED DATA | ON/OFF | MENU |
| 2 | MASTER / SLAVE | Master / Slave | Master |
| 3 | HEEL LIMIT ALARM | ±5° - ±45° | ±25° |
| 4 | TIME (UT) | 0 - 24hr | 23:15:18 |
| 5 | TIMER SINCE RESET | ON / OFF | ON |
| 6 | CURRENT DATE | DD/MM/YY | 20/06/15 |
| 7 | SENSOR VERTICAL CAL | ±5° | 0.0° |
| 8 | VDR BAUD RATE | 4K8 / 38K4 | 4K8 |
| 9 | VDR UPDATE RATE | 5/10 Hz | 10Hz |
| 10 | BAM BAUD RATE | 4K8 / 38K4 | 38K4 |

iii) Press the MENU / SELECT key to highlight the TIME hour's parameter value.

| | | | |
|---|---|---|---|
| 4 | TIME (UT) | 0 - 24hr | 23:15:18 |

iv) Use the UP / DOWN keys to set the hours.

v) Press the MENU key to confirm the new value. The minute's field will now be highlighted.

vi) Use the UP / DOWN keys to set the minutes.

vii) Press the MENU key to confirm the new value. The second's field will now be highlighted.

viii) Use the UP / DOWN keys to set the seconds.

ix) Press the MENU key to confirm the new time value and start the clock.

### 3.11 The Timer Since Reset Parameter.

i) If required, enter the Set Up mode by simultaneously pressing the MENU and DOWN keys for 5 seconds.

ii) Press the DOWN key to step to the TIMER SINCE RESET parameter.

The main display always shows the time & date of the last peak heel angle reset. Optionally the display can also show the elapsed time since last reset, this featured is selected by setting the TIMER SINCE RESET parameter value to ON or OFF.

### 3.11 The Timer Since Reset Parameter (continued).

| MENU PARAMETERS | | | |
|---|---|---|---|
| 1 | RECORDED DATA | ON/OFF | MENU |
| 2 | MASTER / SLAVE | Master / Slave | Master |
| 3 | HEEL LIMIT ALARM | ±5° - ±45° | ±25° |
| 4 | TIME (UT) | 0 - 24hr | 23:15:18 |
| 5 | TIMER SINCE RESET | ON/OFF | ON |
| 6 | CURRENT DATE | DD/MM/YY | 20/06/15 |
| 7 | SENSOR VERTICAL CAL | ±5° | 0.0° |
| 8 | VDR BAUD RATE | 4K8 / 38K4 | 4K8 |
| 9 | VDR UPDATE RATE | 5/10 Hz | 10Hz |
| 10 | BAM BAUD RATE | 4K8 / 38K4 | 38K4 |

iii) Press the MENU / SELECT key to highlight the TIMER SINCE RESET parameter value.

| | | | |
|---|---|---|---|
| 5 | TIMER SINCE RESET | ON / OFF | ON |

iv) Use the UP / DOWN keys to set the required parameter value.

v) Press the MENU key to confirm the new value.

### 3.12 Setting The Date.

i) If required, enter the Set Up mode by simultaneously pressing the MENU and DOWN keys for 5 seconds.

ii) Press the DOWN key to step to the CURRENT DATE parameter.

| MENU PARAMETERS | | | |
|---|---|---|---|
| 1 | RECORDED DATA | ON/OFF | MENU |
| 2 | MASTER / SLAVE | Master / Slave | Master |
| 3 | HEEL LIMIT ALARM | ±5° - ±45° | ±25° |
| 4 | TIME (UT) | 0 - 24hr | 23:15:18 |
| 5 | TIMER SINCE RESET | ON / OFF | ON |
| 6 | CURRENT DATE | DD/MM/YY | 20/06/15 |
| 7 | SENSOR VERTICAL CAL | ±5° | 0.0° |
| 8 | VDR BAUD RATE | 4K8 / 38K4 | 4K8 |
| 9 | VDR UPDATE RATE | 5/10 Hz | 10Hz |
| 10 | BAM BAUD RATE | 4K8 / 38K4 | 38K4 |

iii) Press the MENU / SELECT key to highlight the CURRENT DATE day parameter value.

| | | | |
|---|---|---|---|
| 6 | CURRENT DATE | DD/MM/YY | 20/06/15 |

iv) Use the UP / DOWN keys to set the year.

**3.12 Setting The Date (continued).**

v) Press the MENU key to confirm the new value. The month field will now be highlighted.

vi) Use the UP / DOWN keys to set the month.

vii) Press the MENU key to confirm the new value. The day field will now be highlighted.

viii) Use the UP / DOWN keys to set the day.

ix) Press the MENU key to confirm the new date value.

**3.13 The Sensor Vertical Calibration Parameter.**

**Ensure the sensor is aligned with the vessel and securely mounted as detailed in Section 1.2.1.**

Any offset angle that exists between the heel angle indicated on the NT1000 EPR and the actual heel angle of the vessel can be corrected / adjusted as follows:-

i) If required, enter the Set Up mode by simultaneously pressing the MENU and DOWN keys for 5 seconds.

ii) Press the DOWN key to step to the SENSOR VERTICAL CAL parameter.

| MENU PARAMETERS | | | |
|---|---|---|---|
| 1 | RECORDED DATA | ON/OFF | MENU |
| 2 | MASTER / SLAVE | Master / Slave | Master |
| 3 | HEEL LIMIT ALARM | ±5° - ±45° | ±25° |
| 4 | TIME (UT) | 0 - 24hr | 23:15:18 |
| 5 | TIMER SINCE RESET | ON / OFF | ON |
| 6 | CURRENT DATE | DD/MM/YY | 20/06/15 |
| 7 | SENSOR VERTICAL CAL | ±5° | 0.0° |
| 8 | VDR BAUD RATE | 4K8 / 38K4 | 4K8 |
| 9 | VDR UPDATE RATE | 5/10 Hz | 10Hz |
| 10 | BAM BAUD RATE | 4K8 / 38K4 | 38K4 |

iii) Press the MENU / SELECT key to highlight the SENSOR VERTICAL CAL parameter value.

| | | | |
|---|---|---|---|
| 7 | SENSOR VERTICAL CAL | ±5° | 0.0° |

iv) Use the UP / DOWN keys to adjust the value.

v) Press the MENU key to confirm the new value.

### 3.14 The VDR Baud Rate Parameter.

i) If required, enter the Set Up mode by simultaneously pressing the MENU and DOWN keys for 5 seconds.

ii) Press the DOWN key to step to the VDR BAUD RATE parameter.

| MENU PARAMETERS | | | |
|---|---|---|---|
| 1 | RECORDED DATA | ON/OFF | MENU |
| 2 | MASTER / SLAVE | Master / Slave | Master |
| 3 | HEEL LIMIT ALARM | ±5° - ±45° | ±25° |
| 4 | TIME (UT) | 0 - 24hr | 23:15:18 |
| 5 | TIMER SINCE RESET | ON / OFF | ON |
| 6 | CURRENT DATE | DD/MM/YY | 20/06/15 |
| 7 | SENSOR VERTICAL CAL | ±5° | 0.0° |
| 8 | VDR BAUD RATE | 4K8 / 38K4 | 4K8 |
| 9 | VDR UPDATE RATE | 5/10 Hz | 10Hz |
| 10 | BAM BAUD RATE | 4K8 / 38K4 | 38K4 |

iii) Press the MENU / SELECT key to highlight the VDR BAUD RATE parameter value.

| | | | |
|---|---|---|---|
| 8 | VDR BAUD RATE | 4K8 / 38K4 | 4K8 |

iv) Use the UP / DOWN keys to set the required parameter value.

v) Press the MENU key to confirm the new value.

### 3.15 The VDR Update Rate Parameter.

i) If required, enter the Set Up mode by simultaneously pressing the MENU and DOWN keys for 5 seconds.

ii) Press the DOWN key to step to the VDR UPDATE RATE parameter.

| MENU PARAMETERS | | | |
|---|---|---|---|
| 1 | RECORDED DATA | ON/OFF | MENU |
| 2 | MASTER / SLAVE | Master / Slave | Master |
| 3 | HEEL LIMIT ALARM | ±5° - ±45° | ±25° |
| 4 | TIME (UT) | 0 - 24hr | 23:15:18 |
| 5 | TIMER SINCE RESET | ON / OFF | ON |
| 6 | CURRENT DATE | DD/MM/YY | 20/06/15 |
| 7 | SENSOR VERTICAL CAL | ±5° | 0.0° |
| 8 | VDR BAUD RATE | 4K8 / 38K4 | 4K8 |
| 9 | VDR UPDATE RATE | 5/10 Hz | 10Hz |
| 10 | BAM BAUD RATE | 4K8 / 38K4 | 38K4 |

iii) Press the MENU / SELECT key to highlight the VDR UPDATE RATE parameter value.

| | | | |
|---|---|---|---|
| 9 | VDR UPDATE RATE | 5/10 Hz | 10Hz |

**3.15 The VDR Update Rate Parameter (continued).**

iv) Use the UP / DOWN keys to set the required parameter value.

v) Press the MENU key to confirm the new value.

**3.16 The BAM Baud Rate Parameter.**

i) If required, enter the Set Up mode by simultaneously pressing the MENU and DOWN keys for 5 seconds.

ii) Press the DOWN key to step to the BAM BAUD RATE parameter.

| MENU PARAMETERS | | | |
|---|---|---|---|
| 1 | RECORDED DATA | ON/OFF | MENU |
| 2 | MASTER / SLAVE | Master / Slave | Master |
| 3 | HEEL LIMIT ALARM | ±5° - ±45° | ±25° |
| 4 | TIME (UT) | 0 - 24hr | 23:15:18 |
| 5 | TIMER SINCE RESET | ON / OFF | ON |
| 6 | CURRENT DATE | DD/MM/YY | 20/06/15 |
| 7 | SENSOR VERTICAL CAL | ±5° | 0.0° |
| 8 | VDR BAUD RATE | 4K8 / 38K4 | 4K8 |
| 9 | VDR UPDATE RATE | 5/10 Hz | 10Hz |
| 10 | BAM BAUD RATE | 4K8 / 38K4 | 38K4 |

iii) Press the MENU / SELECT key to highlight the BAM BAUD RATE parameter value.

| | | | |
|---|---|---|---|
| 10 | BAM BAUD RATE | 4K8 / 38K4 | 38K4 |

iv) Use the UP / DOWN keys to set the required parameter value.

v) Press the MENU key to confirm the new value.

**3.17 Setup Menu Exit.**

Exit the Set Up menu by pressing the ALARM TEST/ACK key.

NOTE: If a parameter value is being adjusted at the time the ALARM TEST / ACK is pressed the new value will not be saved. The parameter value will remain at the last saved value and the parameter will be deselected. Press the ALARM TEST / ACK key again to exit the setup menu.

The Set Up menu will automatically exit if there are no key presses for a period of 30 seconds.

## 4.0 Operating Instructions.

**4.1 Turning the NT1000 EPR System ON / OFF.**

**4.2 The Normal Display Interface.**

**4.3 Keypad Functions.**

**4.4 The Stored Data Display.**

**4.5 Alerts & Warnings.**

**4.6 Resetting the Peak Heel Values.**

**4.7 Adjusting the Heel Angle Limit.**

**4.8 Illumination Level Adjustment.**

**4.9 Master / Slave Display Units.**

### 4.1 Turning the NT1000 EPR System ON / OFF.

Switch the NT1000 EPR Control unit **ON** by pressing the ON / OFF / PEAK RST key. Providing a power supply is connected to the unit it will power up and display the normal heel angle display. See Fig 4.2. If both No.1 and No.2 power supplies are absent then the “POWER FAIL LED” will flash and an intermittent audible alarm will sound, press the ON / OFF / PEAK RST key to switch the unit OFF and investigate the cause of the power supply failures.

The NT1000 EPR Control Unit is switched **OFF** by pressing the ON / OFF / PEAK RST key for 5 seconds.

NOTE: A single press of the ON / OFF / PEAK RST key when the unit is powered on will reset the Peak Heel Values, see Section 4.6.

**4.2 The Normal Display Interface.**

Refer to Fig 4.2 for details of the normal heel angle display and the function of each display area.

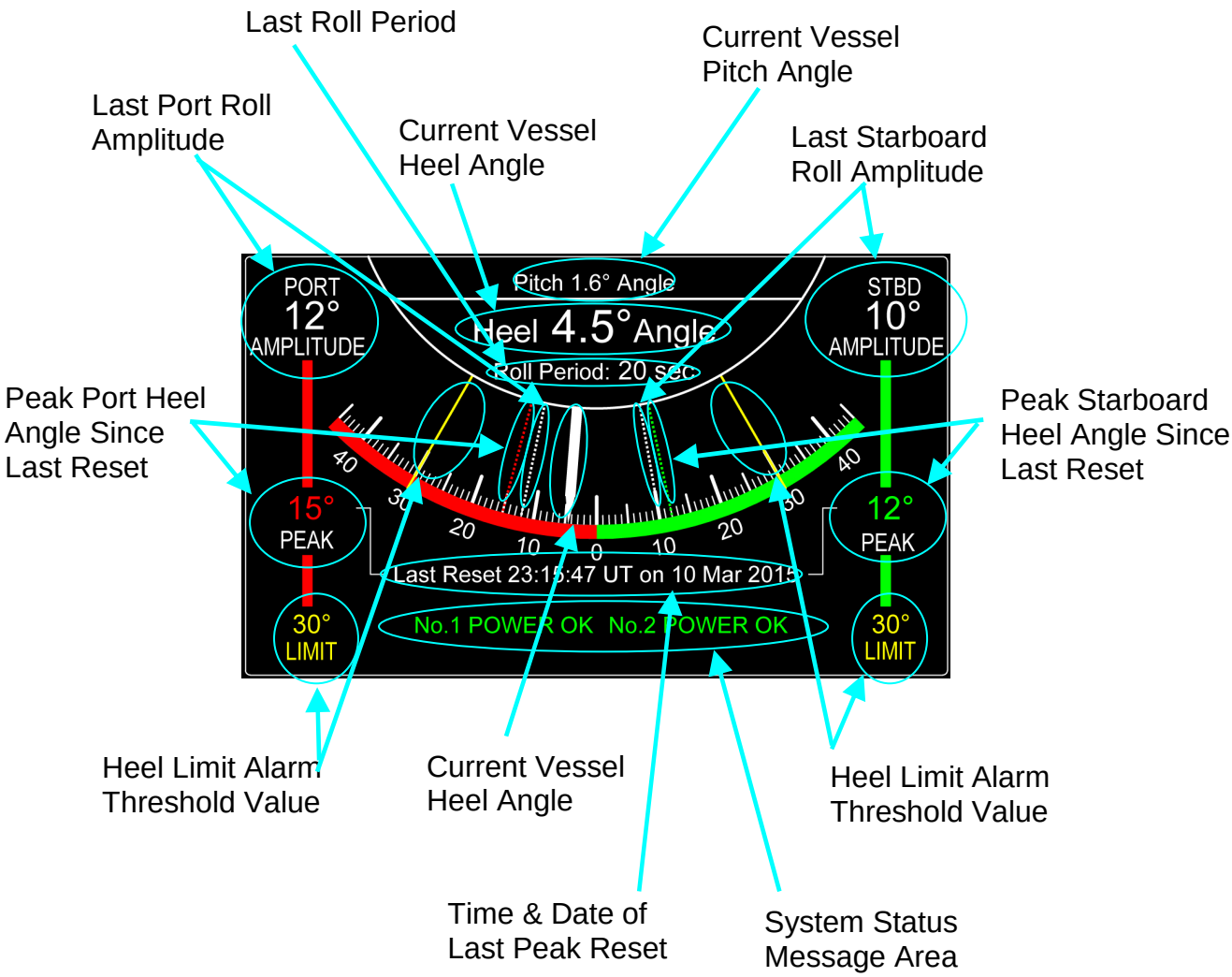


**Fig 4.2 The Normal Display Interface.**

## 4.3 Keypad Functions.

The NT1000 EPR Control / Display Unit features a membrane keypad with 5 tactile keys, see Fig 4.3 for key location and function.

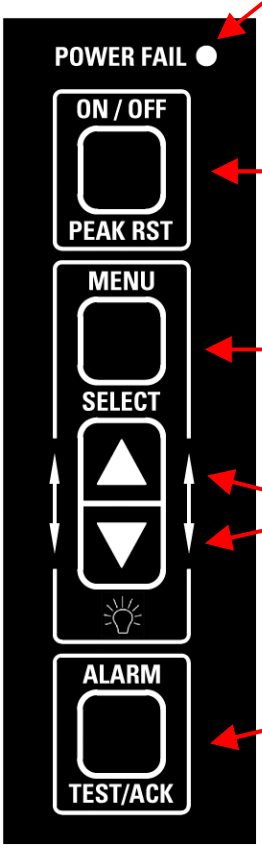


POWER FAIL LED
Flashes accompanied by an intermittent audible alarm if unit is turned on with no power supplies connected. Press the ON / OFF / PEAK RST key to silence alarm.

ON / OFF / PEAK RST
Press once to turn unit ON.
If unit on, press once to reset heel peak hold values.
Press & hold for 5 seconds to turn off.

MENU / SELECT
Press once to enter menu to access stored data or to inspect Set Up parameter values.
Used in Set Up menu to select values.

UP / DOWN
Adjusts illumination level if Menu not active.
Used to select parameters and adjust values in menus.

ALARM / TEST / ACK
Press once to acknowledge a new alert.
Press and hold to test alarms.
Used to immediately exit menus and stored data display.

**Fig 4.3 Key Location & Function.**

## 4.4 The Stored Data Display.

The stored data display is accessed by pressing the MENU key from the normal screen, the full menu screen will be shown but the Set Up parameter values will be “greyed out” to indicate that they cannot be adjusted. See Fig 4.4.1.

The RECORDED DATA parameter line is not “greyed out” (indicating that the parameter is available) and the ON/OFF field will be highlighted. To view recorded data press the MENU key. To exit recorded data and return to the normal screen press the MENU or ALARM TEST / ACK key. The recorded data screen shows the last 3 minutes of heel angle data and the last 30 minutes of roll period data. See Fig 4.4.2

## 4.4 The Stored Data Display (continued).

| MENU PARAMETERS | | | |
|---|---|---|---|
| 1 | RECORDED DATA | ON/OFF | MENU |
| 2 | MASTER / SLAVE | Master / Slave | Master |
| 3 | HEEL LIMIT ALARM | ±5° - ±45° | ±25° |
| 4 | TIME (UT) | 0 - 24hr | 23:15:18 |
| 5 | TIMER SINCE RESET | ON / OFF | ON |
| 6 | CURRENT DATE | DD/MM/YY | 20/06/15 |
| 7 | SENSOR VERTICAL CAL | ±5° | 0.0° |
| 8 | VDR BAUD RATE | 4K8 / 38K4 | 4K8 |
| 9 | VDR UPDATE RATE | 5/10 Hz | 10Hz |
| 10 | BAM BAUD RATE | 4K8 / 38K4 | 38K4 |

Fig 4.4.1. The Inspection Mode Menu.

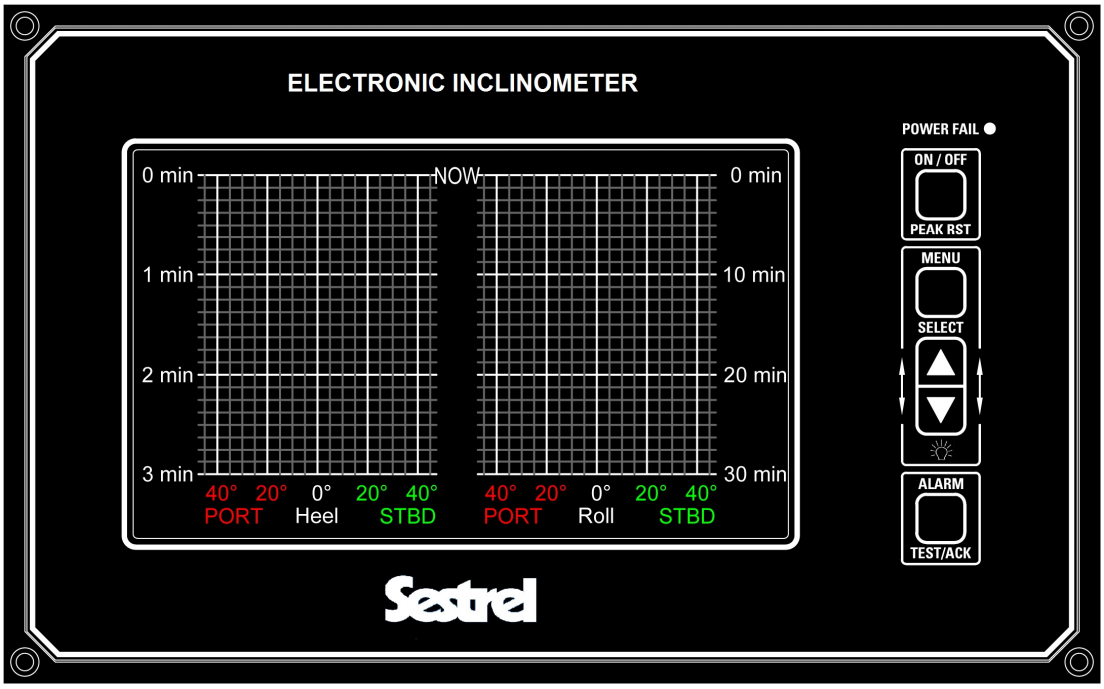


Fig 4.4.2. The Recorded Data Screen.

## 4.5 Alerts & Warnings.

The lower section of the normal display screen shows system status and alert messages.

If an alert becomes active it will be shown as a flashing orange warning accompanied by a single instance of 2 bleeps.

**4.5 Alerts & Warnings (continued).**

If the warning is not acknowledged (from the Bridge Alert Management System (BAMS) or by pressing the ALARM / TEST / ACK key on the NT1000 EPR Unit) for a period of 1 minute then the warning is escalated to an ALARM status. The message will flash red accompanied by 3 bleeps at 7 second intervals.

Once a message is acknowledged it will stop flashing and the bleeps will cease, if the alert is still active it will remain on the display. When the alert becomes inactive the message will be removed from the display (providing it has been acknowledged).

The following messages may be shown:

No.1. POWER FAIL The No. 1 (main) power supply has failed.

No.2. POWER FAIL The No. 2 (backup) power supply has failed.

| | |
|---|---|
| BAMS | The NT1000 EPR has detected that data is not being transmitted to the BAMS (check BAMS cable for short circuits). |
| VDR | The NT1000 EPR has detected that data is not being transmitted to the VDR (check VDR cable for short circuits) |
| SENSOR | The NT1000 ISU Sensor Unit is not transmitting data to the NT1000 EPR Control Unit. |
| BATT | The internal battery (used for power fail detection) is discharged or faulty. |
| EPR Fail | Internal fault with EPR Unit. Turn unit off and remove both power supply plugs, wait 1 minute. Reconnect power supplies and turn unit on. If fault persists seek advice. |
| Slave Data | Slave EPR Unit is not receiving data from the master unit. Check cables to / from slave distribution unit. |

If the heel angle exceeds the heel alarm threshold limit then the word MAX is shown next to the appropriate (port or stbd) LIMIT legend. MAX will initially flash orange, if not acknowledged for a period of 1 minute it will then escalate to an alarm and flash red (accompanied by the usually bleeps). When acknowledged the alert will be cleared once the heel angle returns within limits.

| | |
|---|---|
| MAX | The actual heel angle has exceeded the limit value. |

All alerts are transmitted to the BAMS system via the IEC 61162 serial interface. See Section 5 for details.

### 4.6 Resetting the Peak Hold Heel Angle Values.

The peak hold heel angle values are reset by a single press of the ON / OFF/ PEAK RST key. The time and date of the last reset is shown near the bottom of the normal display screen.

### 4.7 Adjusting the Heel Angle Limit.

**NOTE:** This parameter can only be adjusted from the “MASTER” Control Unit. On Slave Display Units the heel angle limit will correspond to the value set in the “MASTER” Unit.

i) If required, enter the Set Up mode by simultaneously pressing the MENU and DOWN keys for 5 seconds.

ii) Press the DOWN key to step to the HEEL LIMIT ALARM parameter.

| MENU PARAMETERS | | | |
|---|---|---|---|
| 1 | RECORDED DATA | ON/OFF | MENU |
| 2 | MASTER / SLAVE | Master / Slave | Master |
| 3 | HEEL LIMIT ALARM | ±5° - ±45° | ±25° |
| 4 | TIME (UT) | 0 - 24hr | 23:15:18 |
| 5 | TIMER SINCE RESET | ON / OFF | ON |
| 6 | CURRENT DATE | DD/MM/YY | 20/06/15 |
| 7 | SENSOR VERTICAL CAL | ±5° | 0.0° |
| 8 | VDR BAUD RATE | 4K8 / 38K4 | 4K8 |
| 9 | VDR UPDATE RATE | 5/10 Hz | 10Hz |
| 10 | BAM BAUD RATE | 4K8 / 38K4 | 38K4 |

iii) Press the MENU / SELECT key to highlight the HEEL LIMIT ALARM parameter value.

| | | | |
|---|---|---|---|
| 3 | HEEL LIMIT ALARM | ±5° - ±45° | ±25° |

iv) Use the UP / DOWN keys to set the required parameter value.

v) Press the MENU key to confirm the new value.

vi) Press the ALARM / TEST /ACK key to exit the menu and return to the normal display screen.

### 4.8 Illumination Level Adjustment.

Providing the menu screen is not active the LCD and key legend backlight is adjusted through 8 levels using the UP / DOWN keys.

## 4.9 Master / Slave Display Units.

The Slave Display Units are identical to the Master Control Unit. All key functions operate in an identical manner to the Master Unit with the exception of the Set Up menu parameters. The parameter values may be inspected on Slave Units but can only be changed via the Master Unit.

The serial data interfaces for the VDR and BAMS systems are connected to the Master Unit, therefore the Master Unit must be switched on in order for these interfaces to function.

If a Slave Display Unit is switched on without the Master Unit on then the Slave Unit will function independently.

If the Master Unit fails, data to the VDR and BAMS systems will cease. The system functionality can be restored by substituting the Master Unit with a Slave Display Unit. NOTE: The substituted “new” Master Unit must be set to “MASTER” in the Set Up menu in order to enable the VDR / BAMS interfaces.

## 5.0 IEC 61162 Serial Data Interfaces & Failure Alert Messages.

### 5.1 VDR Output Sentences.

The following sentences are transmitted via the VDR output:

$IIHBT,x.x,A,y*hh<cr><lf>

| | | | |
|---|---|---|---|
| Where: | x.x | -- | Repeat interval, usually 10 (seconds) |
| | y | -- | Sequential sentence identifier (0-9) |

$IIHRM,x.x,y.y,z.z,a.a,A,b.b,c.c,hhmmss.ss,dd,ee*hh<CR><LF>

Where:

| | | |
|---|---|---|
| x.x | -- | Actual heel angle, degrees |
| y.y | -- | Roll period, seconds |
| z.z | -- | Roll amplitude, port side, degrees |
| a.a | -- | Roll amplitude, starboard side, degrees |
| b.b | -- | Roll peak hold value, port side, degrees |
| c.c | -- | Roll peak hold value, starboard side, degrees |
| hhmmss.ss | -- | Peak hold value reset time UTC hour / min / sec |
| dd | -- | Peak hold value reset day, 01 to 31 |
| ee | -- | Peak hold value reset month, 01 to 12 |

### 5.2 BAMS Interface.

The following sentences are transmitted via the BAMS output:

$IIHBT,x.x,A,y*hh<cr><lf>

| | | | |
|---|---|---|---|
| Where: | x.x | -- | Repeat interval, usually 10 (seconds) |
| | y | -- | Sequential sentence identifier (0-9) |

**5.2 BAMS Interface (continued).**

$IIALF, 1, 1, 0, hhmmss.ss, B, a, d,NSL,e,,f, g, c---c*hh <CR><LF>

Where:

| | | |
|---|---|---|
| hhmmss.ss | -- | Time of last change |
| a | -- | Alert priority, A or W |
| d | -- | Alert state, A, S, N, O, U or V |
| e | -- | Alert identifier |

10001 = Main Power fail
10002 = Back up Power fail
10003 = Internal battery fail
10004 = Sensor Fail
10005 = Port heel limit
10006 = Stbd heel limit
10007 = BAMS interface fail
10008 = VDR output fail

| | | |
|---|---|---|
| f | -- | Revision counter, 1 to 99 |
| g | -- | Escalation counter, 0 to 9 |
| c---c | -- | Alert text |

"MAIN POWER FAIL"
"BACK POWER FAIL"
"BATT POWER FAIL"
"SENSOR FAIL"
"PORT LIMIT FAIL"
"STBD LIMIT FAIL"
"BAMS FAIL"
"VDR FAIL"

**5.2 BAMS Interface (continued).**

Alert 1 — Additional alerts if applicable

$IIALC,01,01,00, w.w, NSL, x.x , ,y.y,…,NSL, x.x,, y.y*hh <CR><LF>

Where:

| | | |
|---|---|---|
| w.w | -- | Number of alert entries 0-8 |
| x.x | -- | Alert identifier |

10001 = Main Power fail
10002 = Back up Power fail
10003 = Internal battery fail
10004 = Sensor Fail
10005 = Port heel limit
10006 = Stbd heel limit
10007 = BAMS interface fail
10008 = VDR output fail

| | | |
|---|---|---|
| y.y | -- | Revision counter 1-99 |

The following sentence is accepted via the BAMS input:

$xxACN,hhmmss.ss, NSL, x.x,, c, C*hh <CR><LF>

Where:

| | | |
|---|---|---|
| hhmmss.ss | -- | Time |
| x.x | -- | Alert identifier (10001 – 10008) |
| c | -- | Alert command, A, Q, O or S |

## 6.0 Technical Notes & Drawings.

### 6.1 NT1000 ISU Sensor Unit

### 6.2 NT1000 EPR Control Unit

### 6.3 Slave Display Unit Junction Box

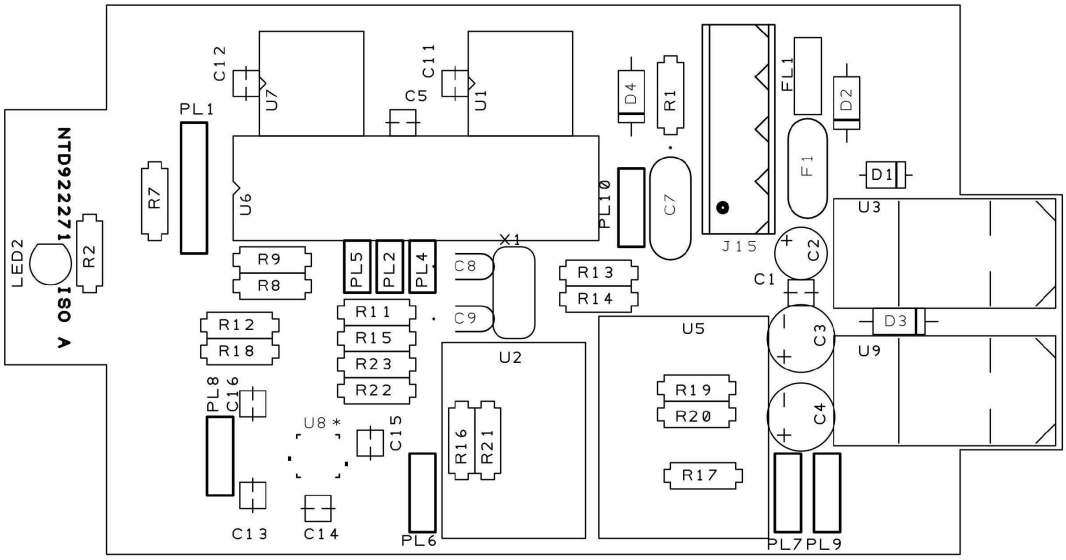


**Fig 6.1. NT1000 ISU Sensor Unit PC Board**

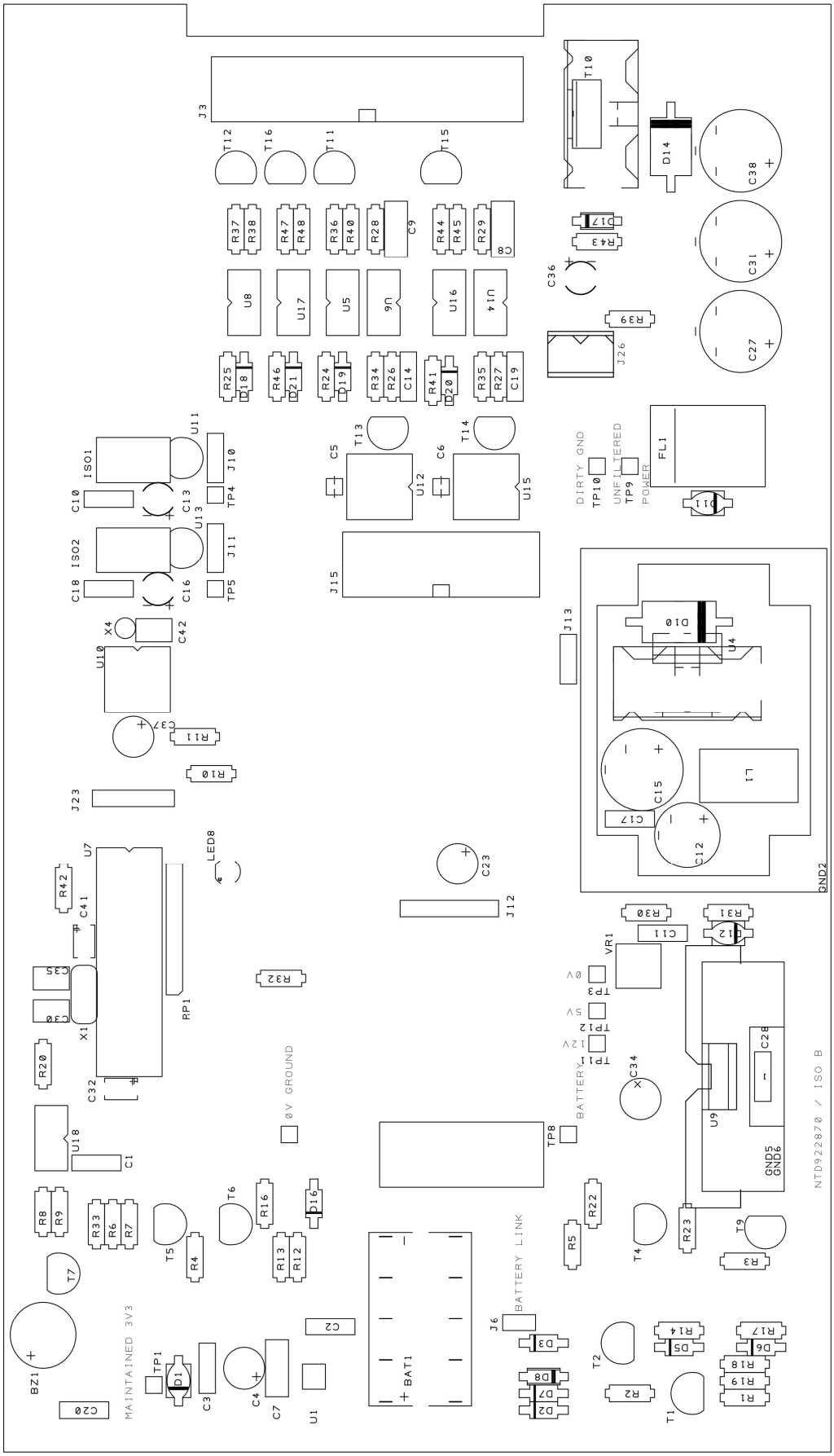


**Fig 6.2.1 NT1000 EPR Control Unit Main Board Layout, Top**

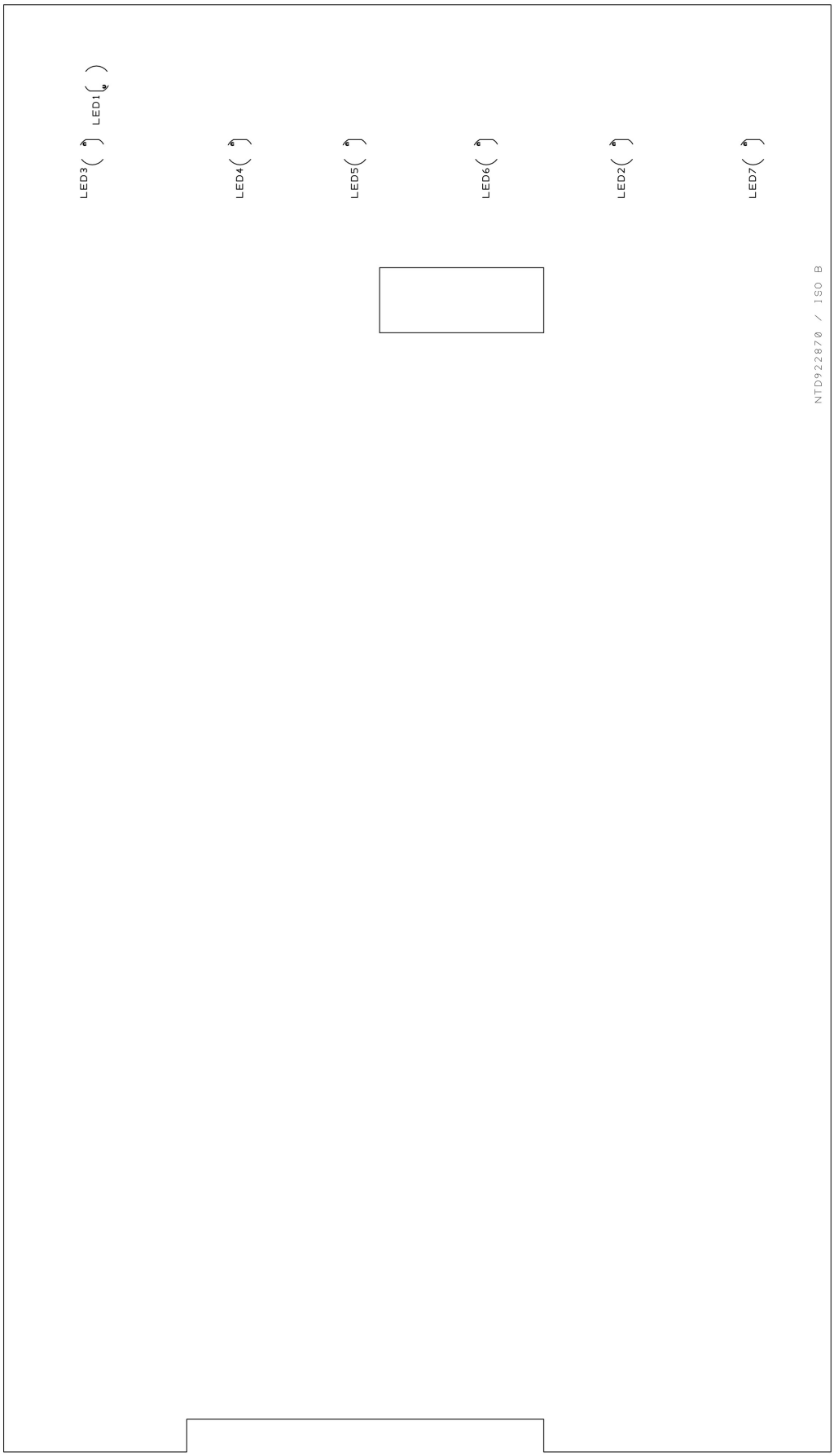


**Fig 6.2.2 NT1000 EPR Control Unit Main Board Layout, Bottom**

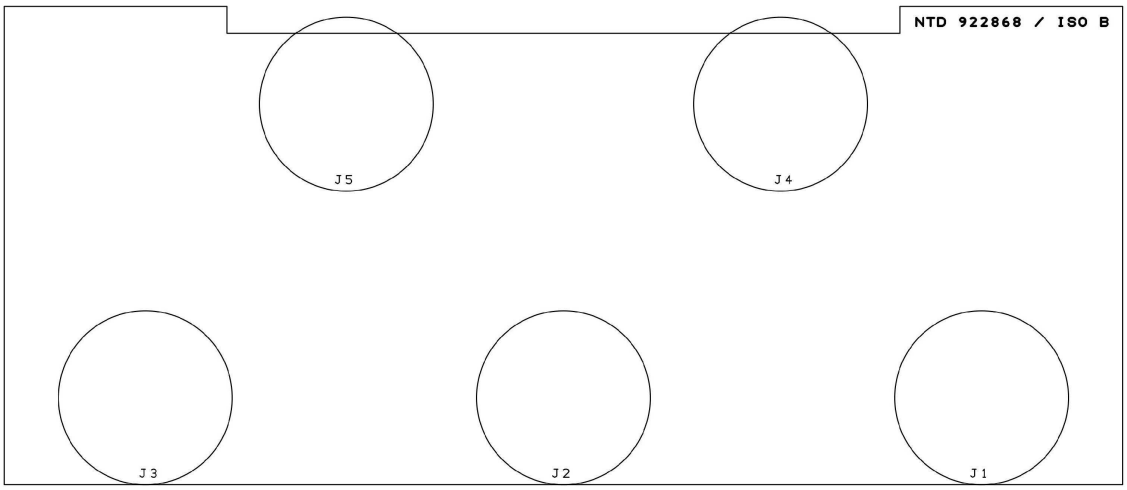


**Fig 6.2.3 NT1000 EPR Control Unit Connector Board Layout, Top**

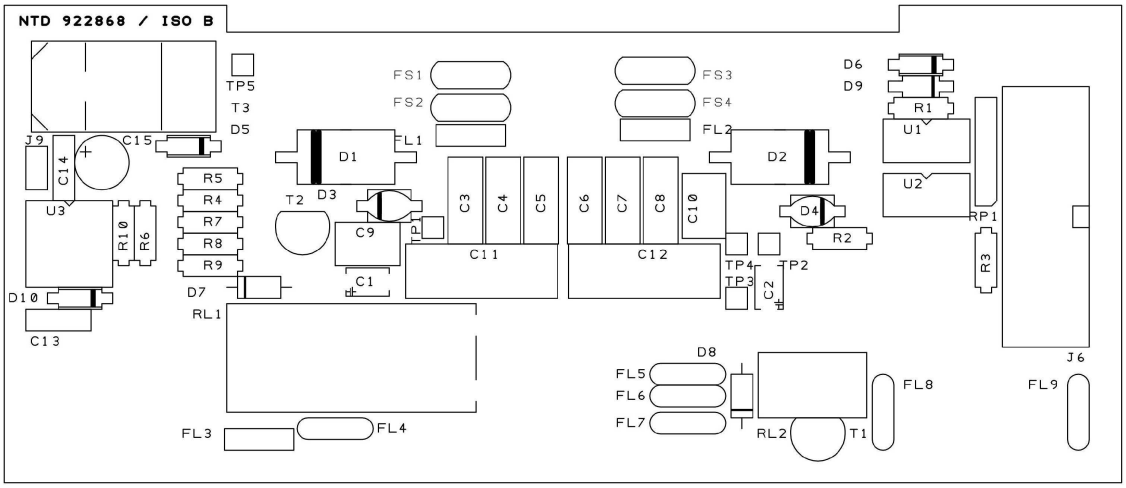


**Fig 6.2.4 NT1000 EPR Control Unit Connector Board Layout, Bottom**

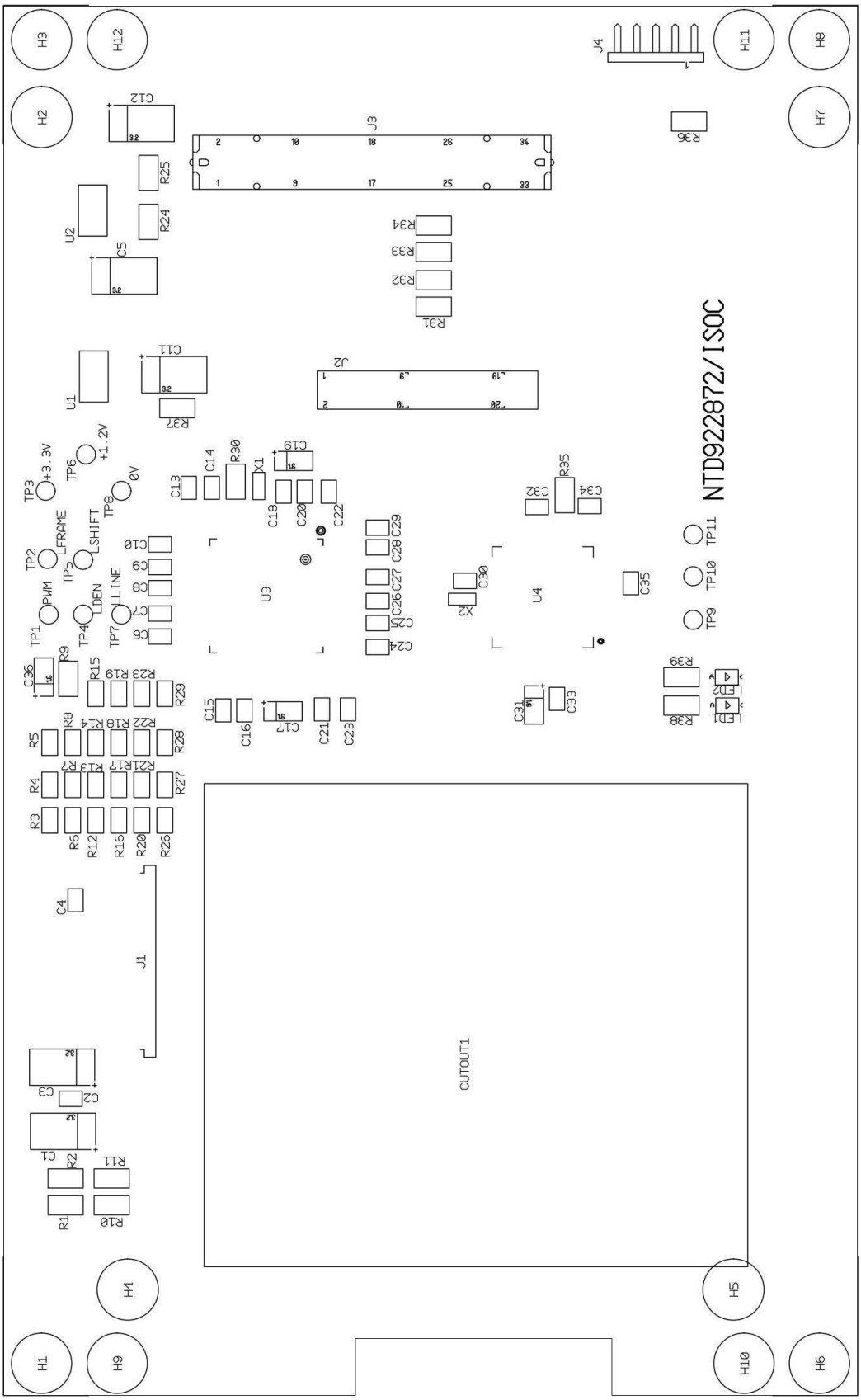


**Fig 6.2.5 NT1000 EPR Control Unit Display Board Layout**

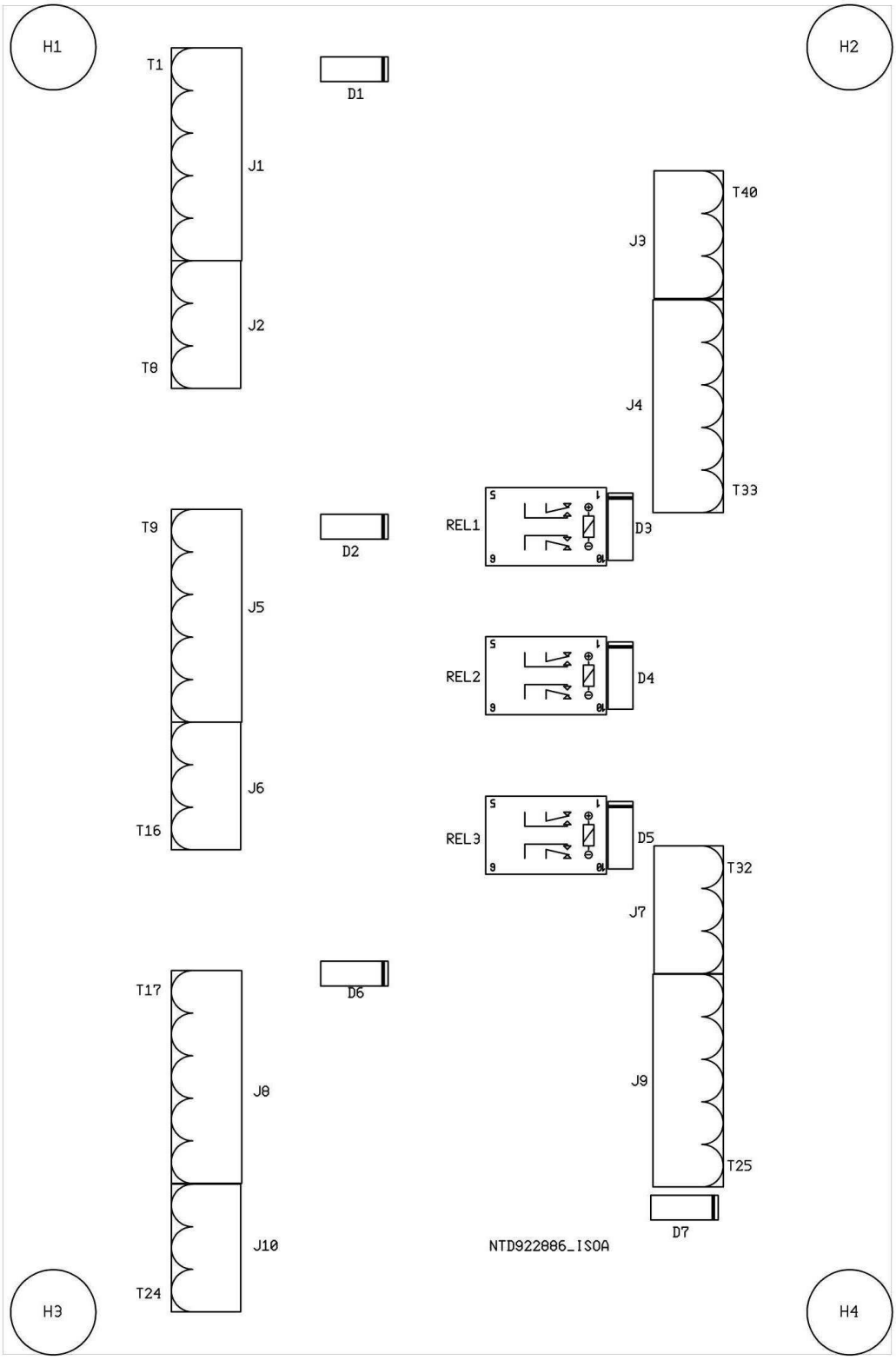


**Fig 6.3 Slave Display Junction Box Board Layout**

## 7.0 Demonstration Mode.

The NT1000 EPR Inclinometer features an inbuilt demonstration mode for training / exhibition purposes.

Demonstration mode is activated by simultaneously pressing the UP and DOWN keys for 5 seconds.

Exit the demonstration mode by simultaneously pressing the UP and DOWN keys for 5 seconds.

Whilst demonstration mode is active the word “DEMONSTRATION” is shown flashing on the normal display screen (see Fig 7.1). “DEMO DATA” is also shown on the recorded data screen.

During the demonstration mode the heel and pitch angles are simulated internally. The heel angle will vary ±20° with a roll period of 28 seconds & the pitch angle will vary ±5.3° with a period of 38 seconds. All other functions will work normally with the exception of VDR serial data output where the heel and roll data are marked as invalid.

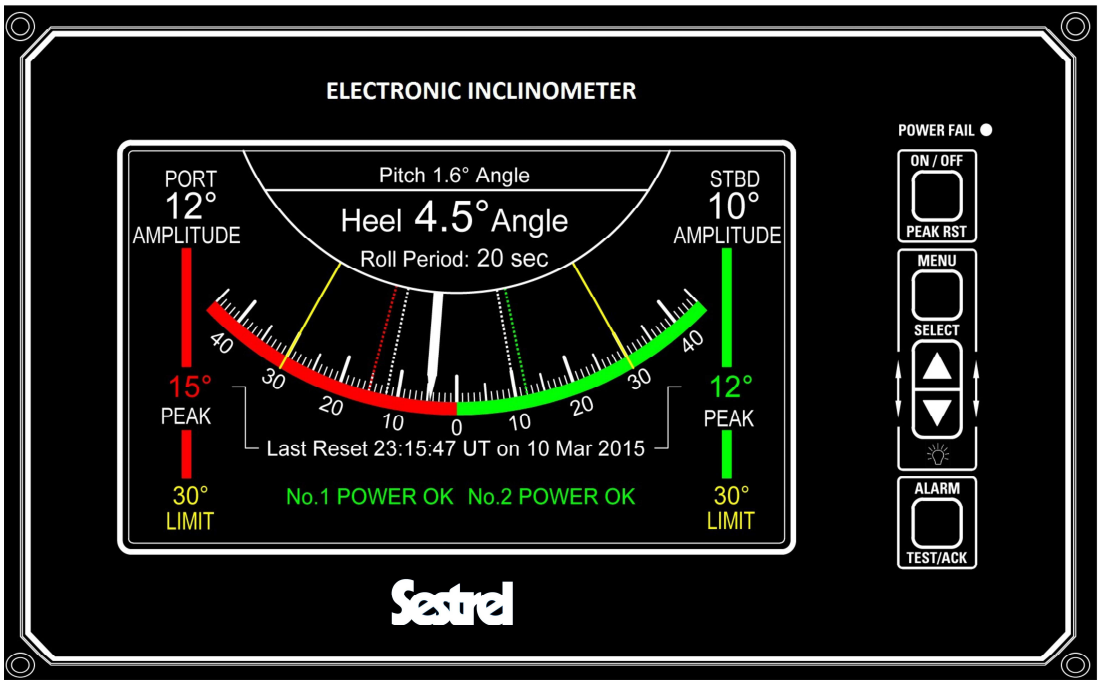


Fig 7.1 Demonstration Mode Display Indication.